REVISIONS			
REV.	DESCRIPTION	DATE	APPROVED
A	Redrawn	9/6/2007	
B	UL & SPEC CHANGES	11/10/2014	JJH

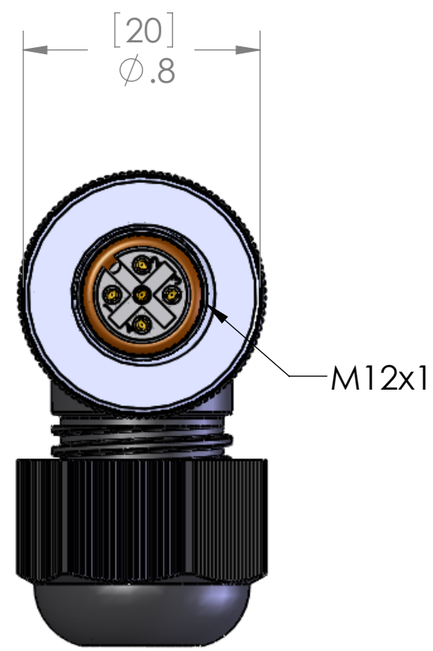

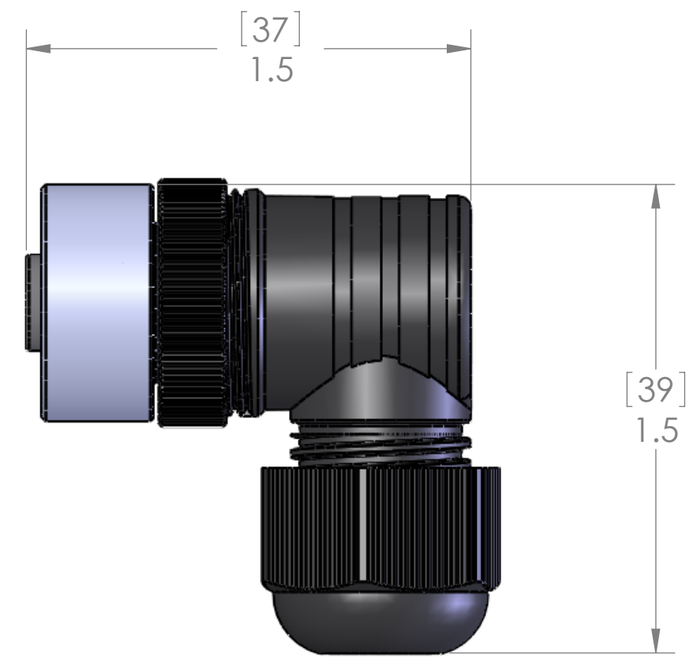

MATERIALS:	
BODY:	POLYAMIDE
COUPLING:	NICKEL PLATED ZINC
CONTACTS:	GOLD PLATED COPPER ALLOY
GROMMET:	NBR
O-RINGS:	NBR & FPM
SPECIFICATIONS:	
WIRE RANGE:	18-24AWG [1.0 - 0.25sqmm]
CABLE RANGE:	0.157 - 0.315" [4.0 - 8.0mm]
CONNECTION:	SCREW TERMINALS
VOLTS:	125V
AMPS:	4A
SEAL:	IP67
TEMP RANGE:	STATIC: -40°C - +100°C
	DYNAMIC: -20°C -+100°C

All connections made via Screw Terminals.

APPROVALS:	
US:	UL LISTED
CANADA:	C-UL LISTED

PROPRIETARY AND CONFIDENTIAL
THE INFORMATION CONTAINED IN THIS DRAWING IS THE SOLE PROPERTY OF MENCOM CORPORATION. ANY REPRODUCTION IN PART OR AS A WHOLE WITHOUT THE WRITTEN PERMISSION OF MENCOM CORPORATION IS PROHIBITED.

UNLESS OTHERWISE SPECIFIED:
DIMENSIONS ARE IN INCHES AND [MM]
MATERIAL
FINISH
DO NOT SCALE DRAWING

	NAME
DRAWN	BEM
CHECKED	
ENG APPR.	
MFG APPR.	
Q.A.	

COMMENTS:

MENCOM CORPORATION

TITLE:

SIZE	DWG. NO.	REV
B	MDC-5FP-FW09-R	B
SCALE: 2:1	WEIGHT:	SHEET 1 OF 1