PIN #	COLOR
1	BROWN
2	WHITE
3	BLUE
4	BLACK

REVISIONS			
REV.	DESCRIPTION	DATE	APPROVED
A	INITIAL RELEASE	8/9/2005	

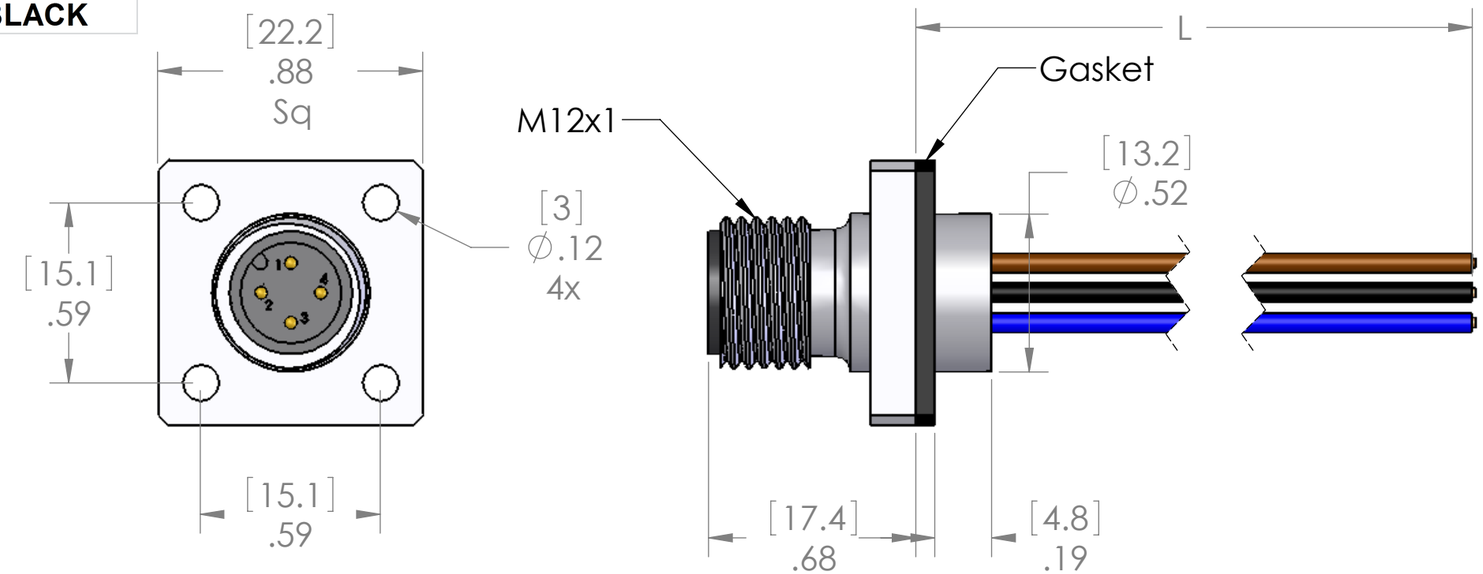

P/N	L
MDC-4MR-PM	12" [0.3m]
MDC-4MR-PM-0.5M	19" [0.5m]
MDC-4MR-PM-1M	40" [1m]
MDC-4MR-PM-2M	79" [2m]
MDC-4MR-PM-3M	118" [3m]
MDC-4MR-PM-4M	157" [4m]
MDC-4MR-PM-5M	197" [5m]
MDC-4MR-PM-10M	393" [10m]

MATERIALS	
BODY:	NICKEL PLATED BRASS
CONTACTS:	GOLD PLATED COPPER ALLOY
WIRES:	22AWG UL1007/1569
INSERT:	POLYAMIDE
O-RING:	NBR

APPROVALS:	
US	UL LISTED
CANADA	C-UL LISTED

PROPRIETARY AND CONFIDENTIAL

THE INFORMATION CONTAINED IN THIS DRAWING IS THE SOLE PROPERTY OF MENCOM CORPORATION. ANY REPRODUCTION IN PART OR AS A WHOLE WITHOUT THE WRITTEN PERMISSION OF MENCOM CORPORATION IS PROHIBITED.

VOLTS	300V
AMPS	4A
TEMP	105°C

SPECIFICATIONS

UNLESS OTHERWISE SPECIFIED:

DIMENSIONS ARE IN INCHES AND [MM]

MATERIAL

FINISH

DO NOT SCALE DRAWING

	NAME
DRAWN	BEM
CHECKED	
ENG APPR.	
MFG APPR.	
Q.A.	

COMMENTS:

MENCOM CORPORATION

TITLE:

SIZE	DWG. NO.	REV
B	MDC-4MR-PM-ZZ	A

SCALE: 2:1 | WEIGHT: | SHEET 1 OF 1