SAGINAW CONTROL & ENGINEERING
SCE-FA1010-230

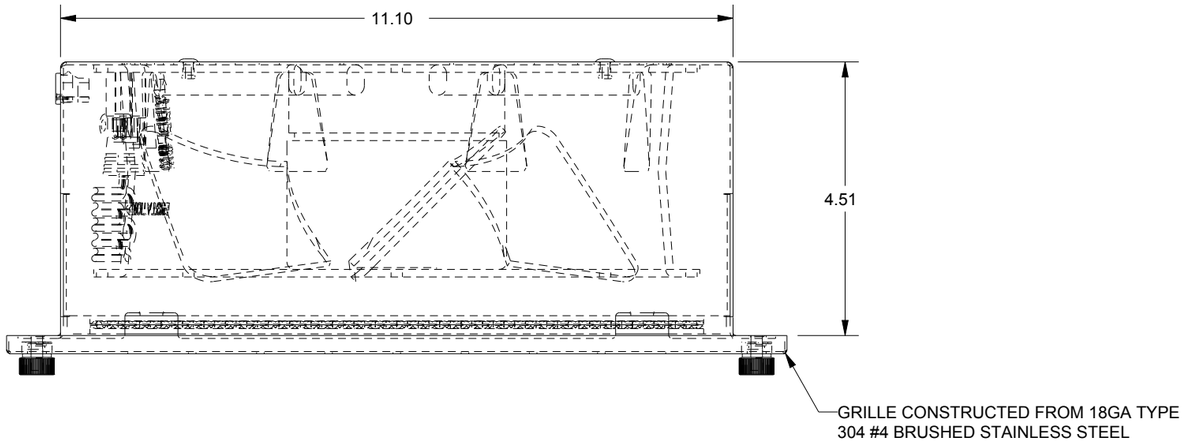

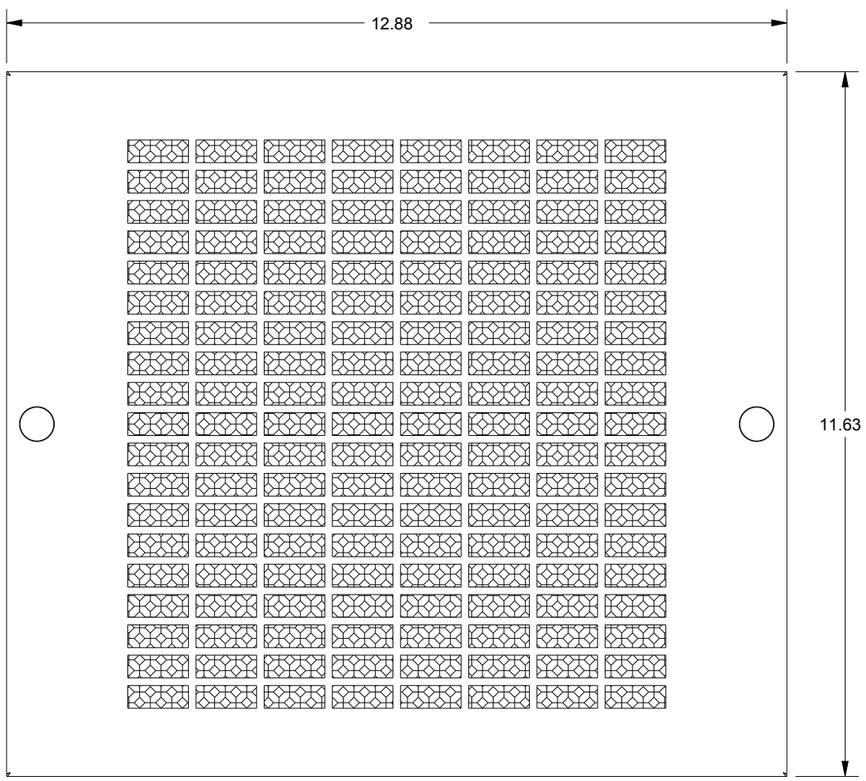

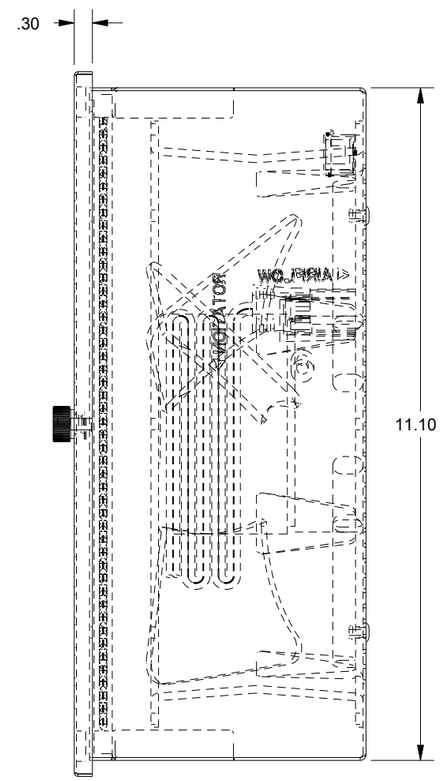

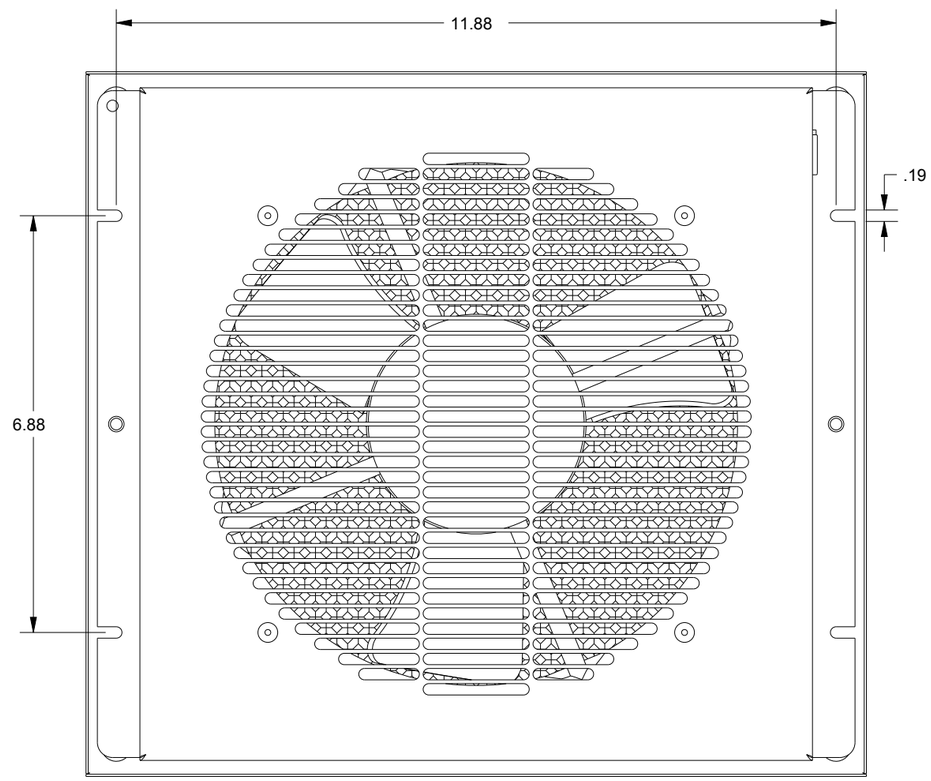

DATA SUBJECT TO CHANGE WITHOUT NOTICE