EIXO/SHAFT	
PADRÃO/STANDARD	
OPCIONAL/OPTIONAL	
ESPECIAL/SPECIAL	X

Dimensões em polegadas
Dimensions in inches

CERTIFIED
WEG MOTORES
Certified document.
Not subject to changes.

THIS IS AN UPDATED REVISION, THE PREVIOUS ONE MUST BE DISREGARDED.

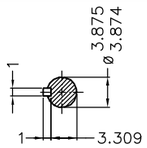

Section A–A

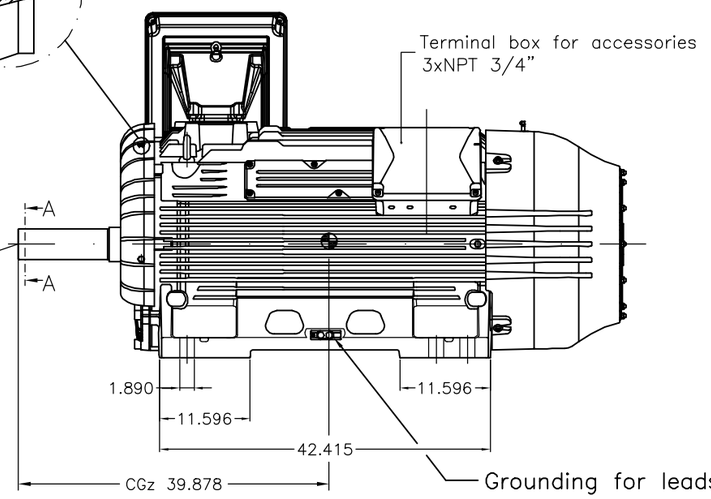

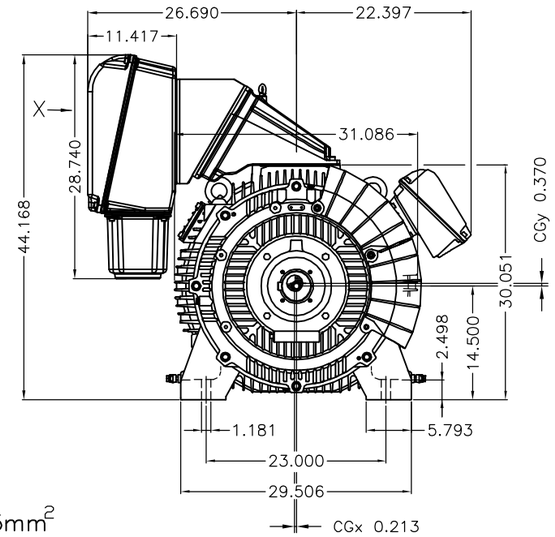

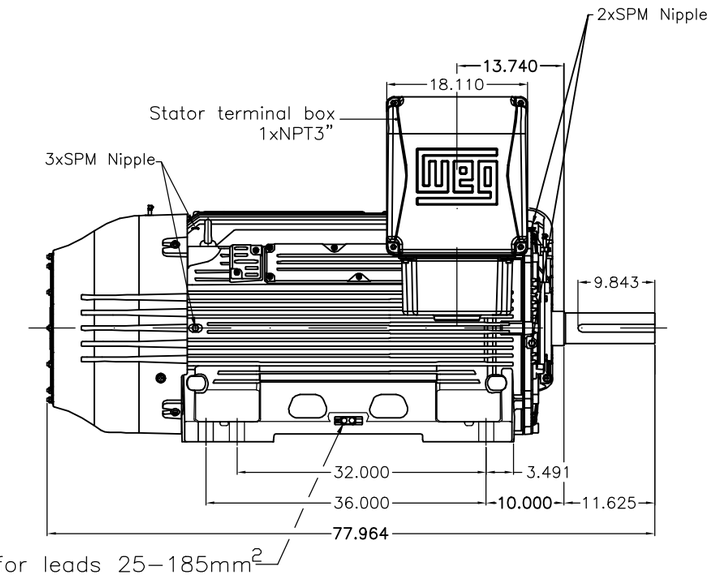

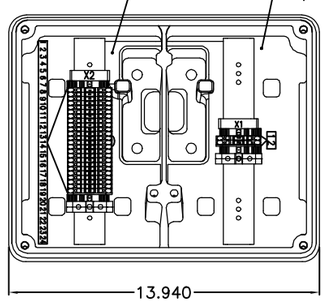

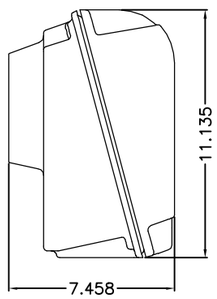

Scale 1:7

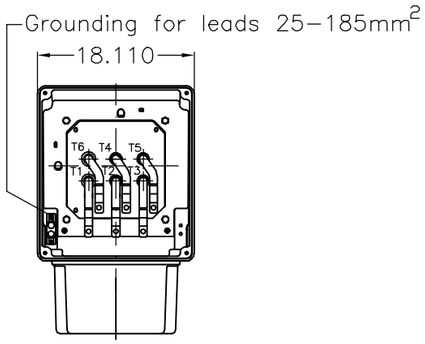

View X
Scale 1:18

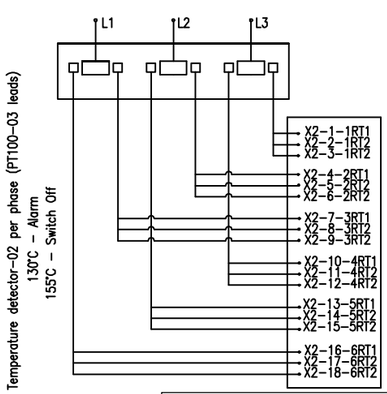

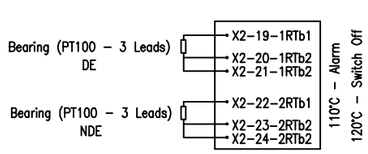

Space heaters connection diagram

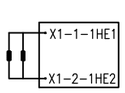

110 – 127 V
146 – 194 W

- Graxeira prolongada em aço inoxidável / Stainless steel extended grease fitting
- Pintura interna tropicalizada conforme IEEE841 / Tropicalized internal painting according to IEEE841
- Carcaça com furação para pino guia nos quatro pés / Frame with holes for dowel pins on the four feet
- Suporte especial para a caixa de ligação / Special support for terminal box
- Dreno roscado em aço inoxidável / Stainless steel threaded drain
- Cabos de ligação com terminais especiais / Connection cables with special terminal lugs
- Vibração conforme IEEE841 / Vibration according to IEEE841
- Planicidade especial dos pés conforme IEEE841/API 541
  Special feet flatness according to IEEE841/API 541
- Saída de graxa conforme IEEE841 / Grease outlet according to IEEE841
- Chaveta B / B key
- Balanceamento especial 1/2 chaveta / Special balancing with half key
- Ventilador externo em ferro fundido com pintura epoxi / Cast iron external fan with epoxy coating
- Terminal com furo de diâmetro 13 mm para pino de ligação
  Terminal with 13 mm diameter hole for connection bolt
- Grau de vibração B / Vibration grade B
- Resistência de aquecimento 110 a 127 V / Space heaters 110 to 127 V
- Tampa defletora especial / Special fan cover
- Apto a sensor de vibração SPM / SPM studs
- Vedação no mancal dianteiro – INPRO/SEAL / DE sealing – INPRO/SEAL
- Sem placa de bornes / Without terminal block
- Cor RAL 5009 / Color RAL 5009
- Plano de pintura 214P / Painting plan 214P
- Forma construtiva B3D / Mounting B3R(D)

WEG ELECTRIC CORPORATION – WEC

					SCALE	1:1	
500002383617		100000181978	FRANCINES	CLEBERP	CLEBERP	24.05.2023	05
500001065001		CHANGED CLAIM 413938606	RBOECK	ARTHURS	ARTHURS	23.07.2015	04
ECM	LOC	SUMMARY OF MODIFICATIONS	EXECUTED	CHECKED	RELEASED	DATE	VER

EXECUTED	MAIKONP	MOTOR TRIFÁSICO W50	10003218792
CHECKED	RFRANCA	FRAME 5809/10 IP55	000 05
RELEASED	RFRANCA		
REL DT	19.11.2014	WMO JARAGUA DO SUL ENGENHARIA DE PRODUTO	SHEET 1 / 1

- Terminal de aterramento adicional na carcaça (simetricamente oposto) em bronze
  Additional bronze grounding lug on frame (symmetrically opposite)
- Ilhó especial na passagem dos cabos para a carcaça
  Special rubber grommet at the cables entry on frame
- Motor com características IEEE841 / Motor with IEEE841 features

500 HP 06 Poles 60Hz 2300/4160V 413643343 ELET/MEC A

UNCONTROLLED COPY
RELEASED
ZME A3

WEG's property. Forbidden reproduction without previous authorization.