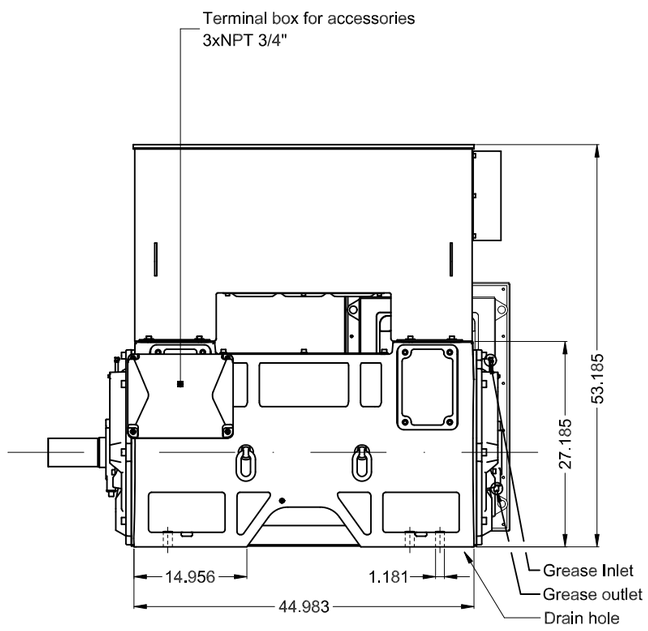

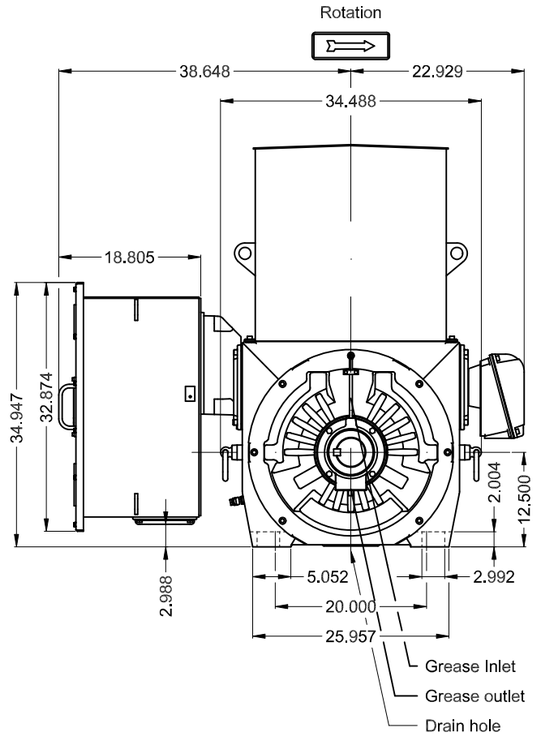

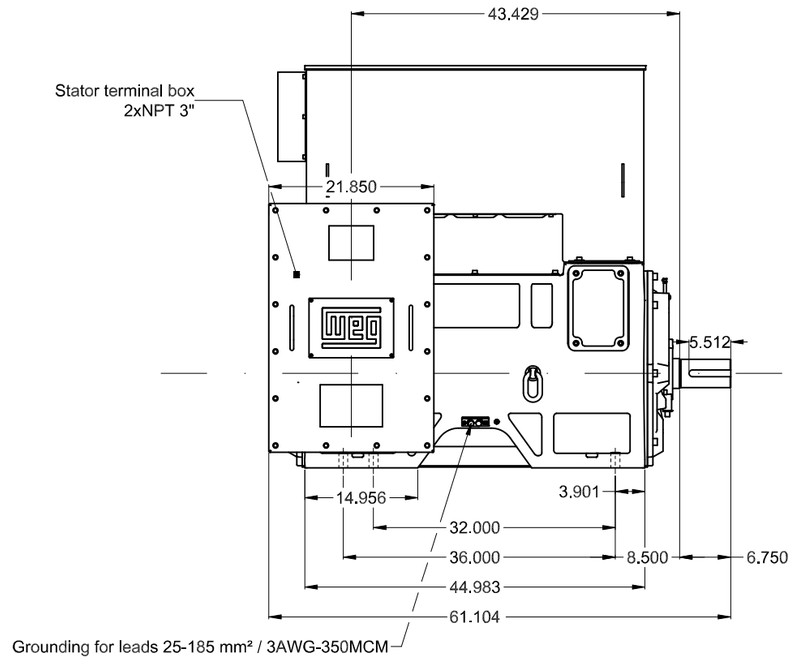

NDE endshield with electrically insulated bearing hub (HGF)

Color RAL 5009

Painting plan 214P

Mounting B3R(D)

DE Shaft End

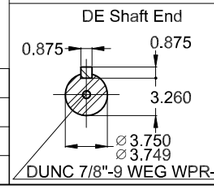

700 HP 06 Poles 60 Hz 460 V | A

1:20

ECM	LOC	SUMMARY OF MODIFICATIONS	EXECUTED	CHECKED	RELEASED	DATE	VER
			HYBRISUSER				00

EXECUTED	HYBRISUSER	THREE PH. MOTOR W60	PREVIEW
CHECKED		FRAME 5010/11 IP24 ODP WPII	WDD 00
RELEASED			
REL. DATE		WMO Jaragua do Sul Product Engineering	SHEET 1 / 1

Dimensions in inches

XME A3

WEG's property. Forbidden reproduction without previous authorization.