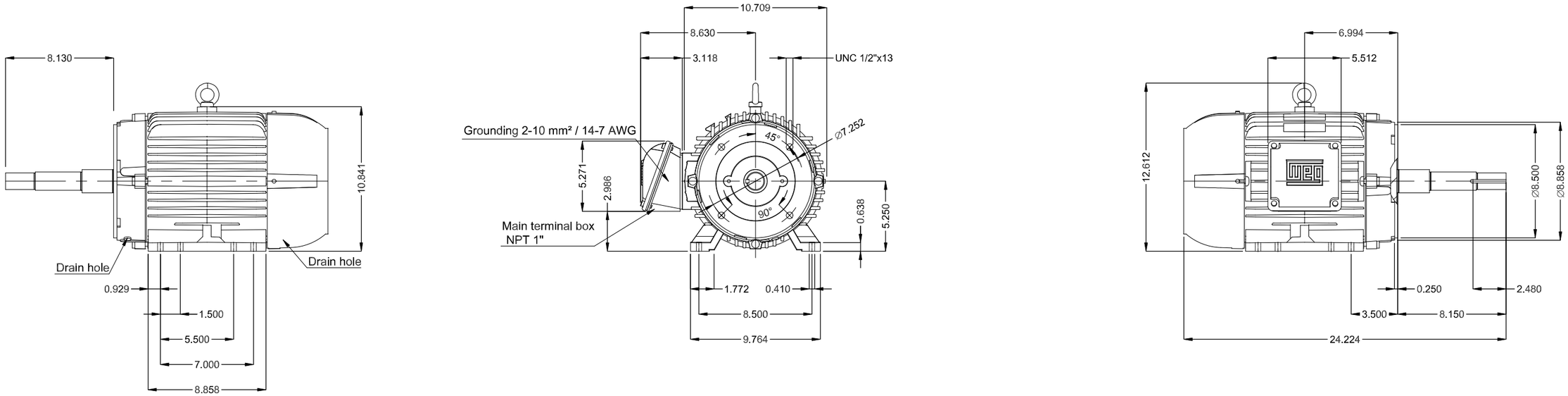


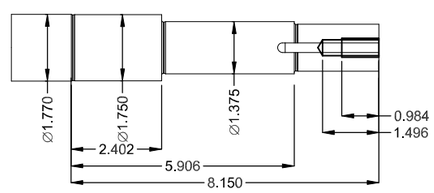


DE Shaft End

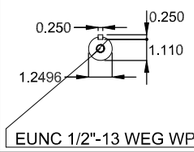


EUNC 1/2"-13 WEG WPR-7309

| |
|---|
| Color RAL 5009 |
| Painting plan 207A |
| Mounting NEMA F-1 |
| Mounting B34R(D) |

7.5 HP 02 Poles 60 Hz | A

| ECM | LOC | SUMMARY OF MODIFICATIONS | EXECUTED | CHECKED | RELEASED | DATE | VER |
|---|---|---|---|---|---|---|---|
| | | | HYBRISUSER | | | | 00 |

| | |
|---|---|
| EXECUTED | HYBRISUSER |
| CHECKED | |
| RELEASED | |
| REL. DATE | |

THREE PH. MOTOR JM/JP/JET PUMP W22 HIGH EFF.
FRAME 213/5JP IP55 TEFC

PREVIEW

WDD 00

SHEET /

Dimensions in inches

A3

WEG's property. Forbidden reproduction without previous authorization.