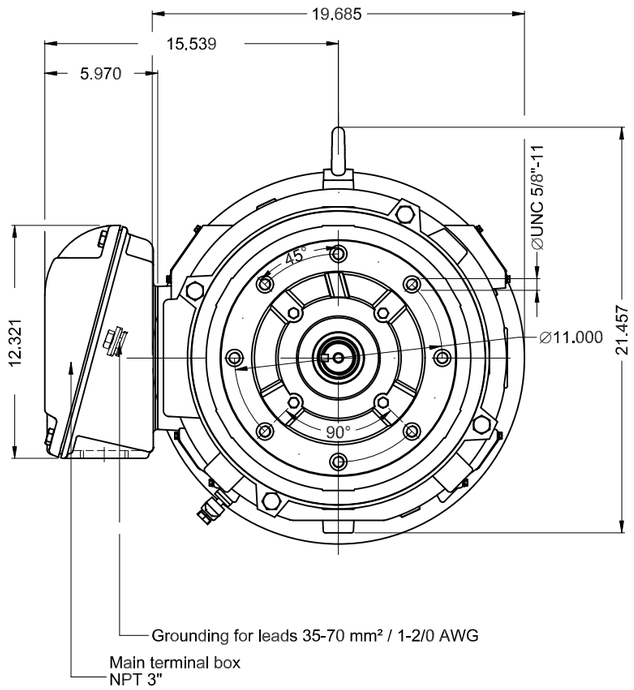

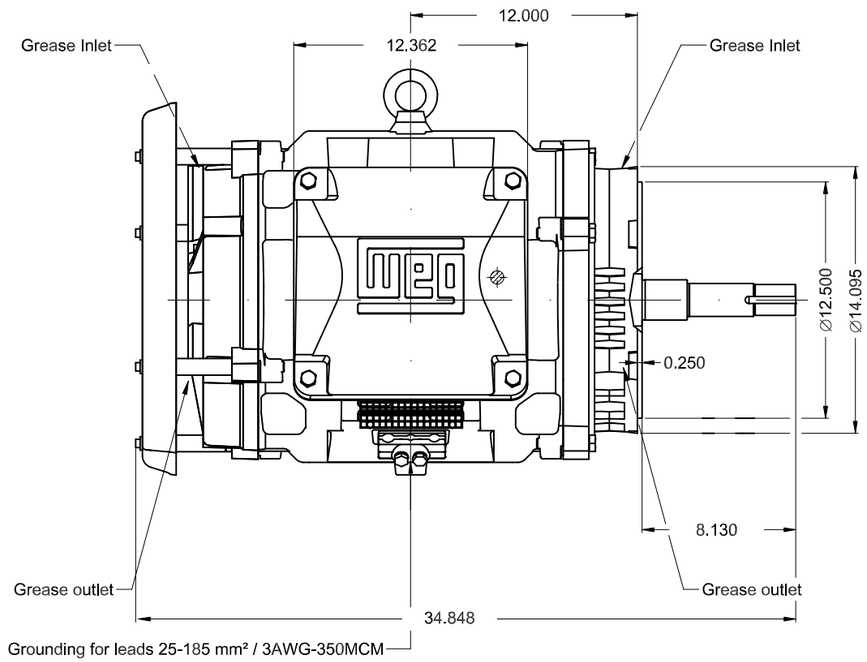

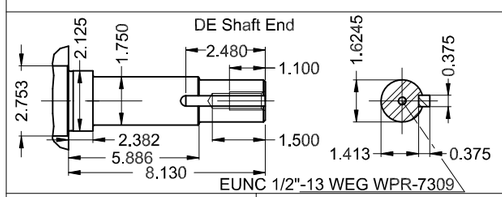

75 HP 02 Poles 60 Hz | A

1:8

ECM	LOC	SUMMARY OF MODIFICATIONS	EXECUTED	CHECKED	RELEASED	DATE	VER
			HYBRISUSER				00

Color RAL 3002	
Painting plan 203A	
Mounting NEMA W-6	
Mounting V18	

EXECUTED	HYBRISUSER	THREE PH. MOTOR W40 CLOSE COUPLED PUMP JP TYPE HIGH EFF.	PREVIEW
CHECKED		FRAME 364/5JP IP23 ODP	WDD 00
RELEASED			
REL. DATE		WMO Jaragua do Sul Product Engineering	SHEET 1 / 1

Dimensions in inches

XME A3

WEG's property. Forbidden reproduction without previous authorization.