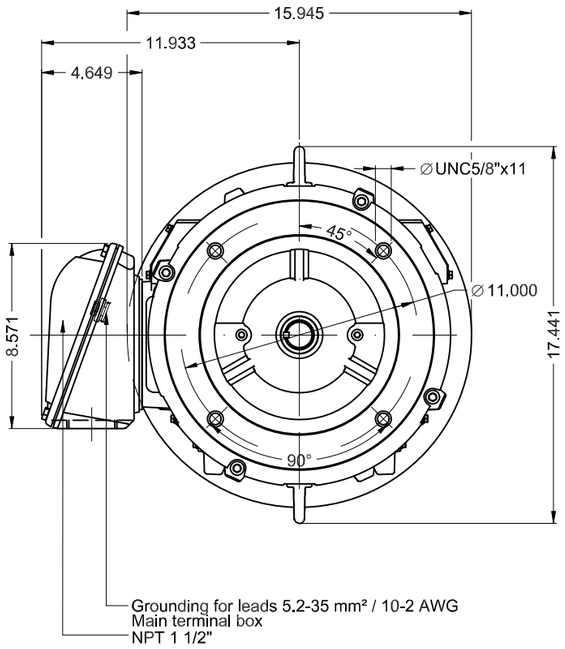

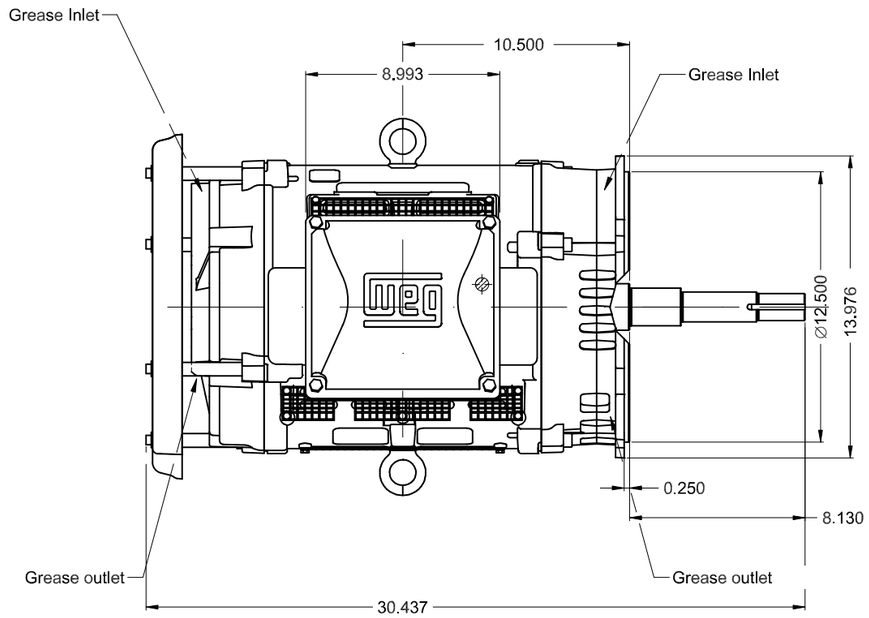

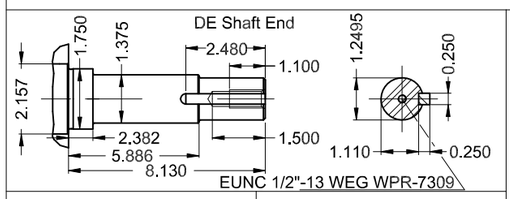

Color RAL 3002

Painting plan 203A

Mounting NEMA W-6

Mounting V18

40 HP 02 Poles 60 Hz | A

1:7

ECM	LOC	SUMMARY OF MODIFICATIONS	EXECUTED	CHECKED	RELEASED	DATE	VER
			HYBRISUSER				00

EXECUTED	HYBRISUSER	THREE PH. MOTOR W40 CLOSE COUPLED PUMP JP TYPE HIGH EFF.	PREVIEW
CHECKED		FRAME 284/6JP IP23 ODP	WDD 00
RELEASED			
REL. DATE		WMO Jaragua do Sul Product Engineering	SHEET 1 / 1

Dimensions in inches

XME A3

WEG's property. Forbidden reproduction without previous authorization.