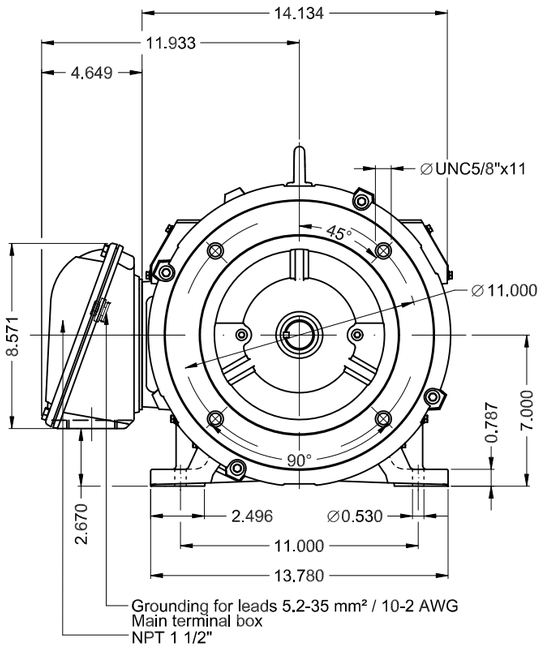

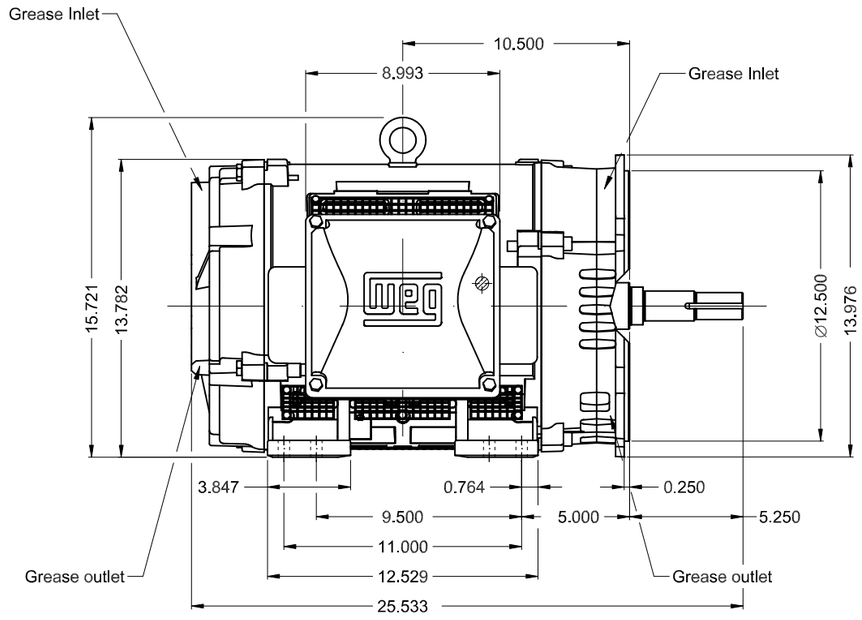

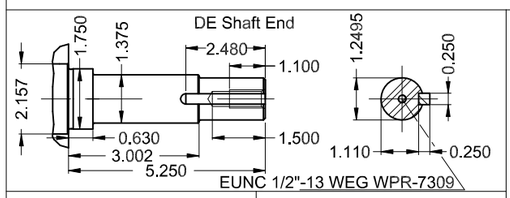

Color RAL 5009

Painting plan 203A

Mounting NEMA F-1

Mounting B34R(D)

40 HP 02 Poles 60 Hz | A

1:7

ECM	LOC	SUMMARY OF MODIFICATIONS	EXECUTED	CHECKED	RELEASED	DATE	VER
			HYBRISUSER				00

EXECUTED	HYBRISUSER	THREE PH. MOTOR W40 CLOSE COUPLED PUMP JM TYPE NEMA PREM. EFF.
CHECKED		FRAME 284/6JM IP23 ODP
RELEASED		
REL. DATE		WMO Jaragua do Sul Product Engineering

PREVIEW

WDD 00

SHEET 1 / 1

Dimensions in inches

XME A3

WEG's property. Forbidden reproduction without previous authorization.