EIXO/SHAFT	
PADRÃO/STANDARD	
OPCIONAL/OPTIONAL	
ESPECIAL/SPECIAL	X

Dimensiones en pulgadas
Dimensions in inches

PRELIMINARY DOCUMENT
Not to be used for installation purposes.

THIS IS AN UPDATED REVISION, THE PREVIOUS ONE MUST BE DISREGARDED.

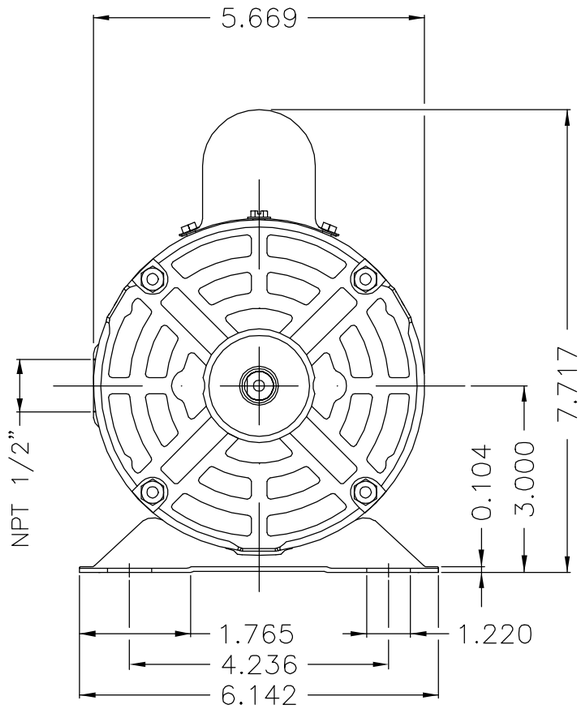

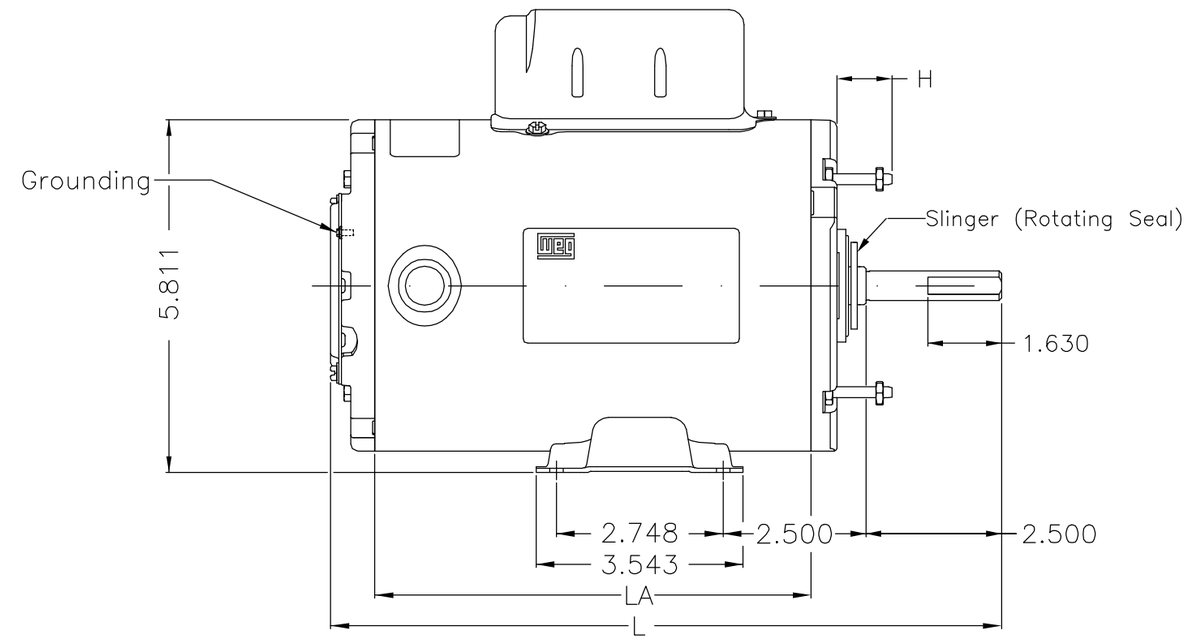

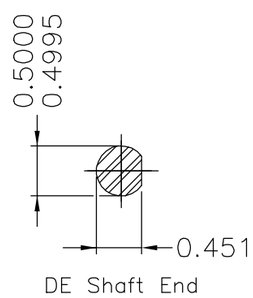

Anillo de goma en la punta del eje / Slinger ring on shaft end
Protector térmico fenólico – Automático / Phenolic thermal protector – automatic
Color Munsell N 1 negro mate / Color Munsell N 1 matte black
Plan de pintura 207N / Painting plan 207N
Forma constructiva F-1/B3R(D) / Mounting F-1/B3R(D)

WEG ELECTRIC CORPORATION - WEC

ECM	LOC	SUMMARY OF MODIFICATIONS	EXECUTED	CHECKED	RELEASED	DATE	VER
500002256409		ACCORDING TO NORMAL RELEASE	PNAVA	ECHARCO	ISAAVEDRA	17.11.2022	05
500001884821	C5	ACCORDING TO CLAIM 417657811	ISAAVEDRA	EJESUS	PNAVA	03.02.2021	03

EXECUTED	MORALESR	SINGLE PHASE MOTOR CLOSED ROLLED STEEL FRAME 48Z IP55 TEAO	10007869348		
CHECKED	PNAVA		000	05	
RELEASED	PNAVA				
REL DT	20.08.2020	WMX Huehuetoca Product Engineering	SHEET	1 / 1	

				L	LA	H	
0.33 HP	06 Poles	60Hz	417435860	11.735	7.480	1.039	B
0.33 HP	04 Poles	60Hz	417435655	10.554	6.299	1.000	A

UNCONTROLLED COPY
RELEASED
ZME A3

WEG's property. Forbidden reproduction without previous authorization.