EIXO/SHAFT	
PADRÃO/STANDARD	
OPCIONAL/OPTIONAL	
ESPECIAL/SPECIAL	X

Dimensões em polegada
Dimensions in inches

CERTIFIED
WEG MOTORES
Certified document.
Not subject to changes.

THIS IS AN UPDATED REVISION, THE PREVIOUS ONE MUST BE DISREGARDED.

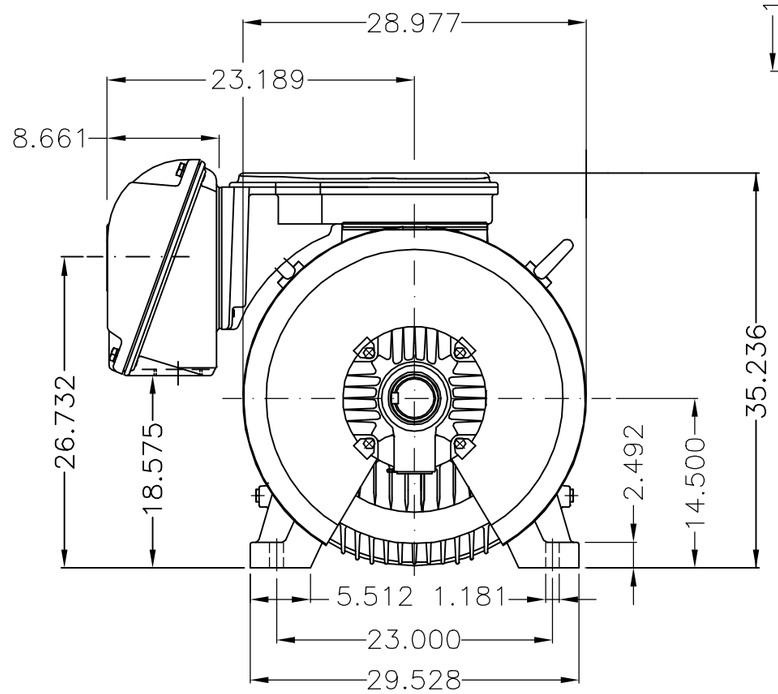

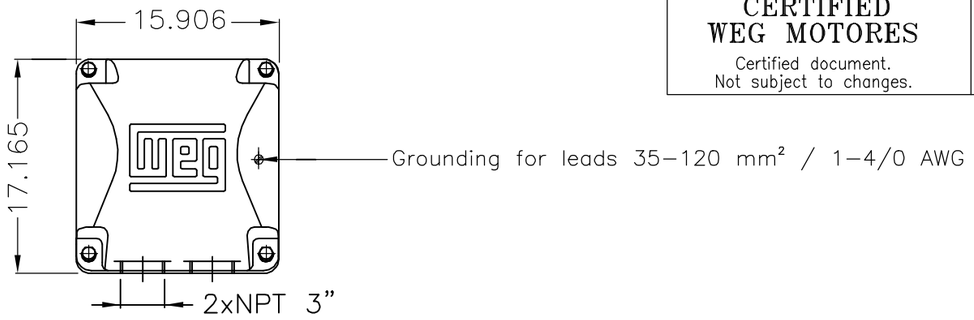

Main terminal box

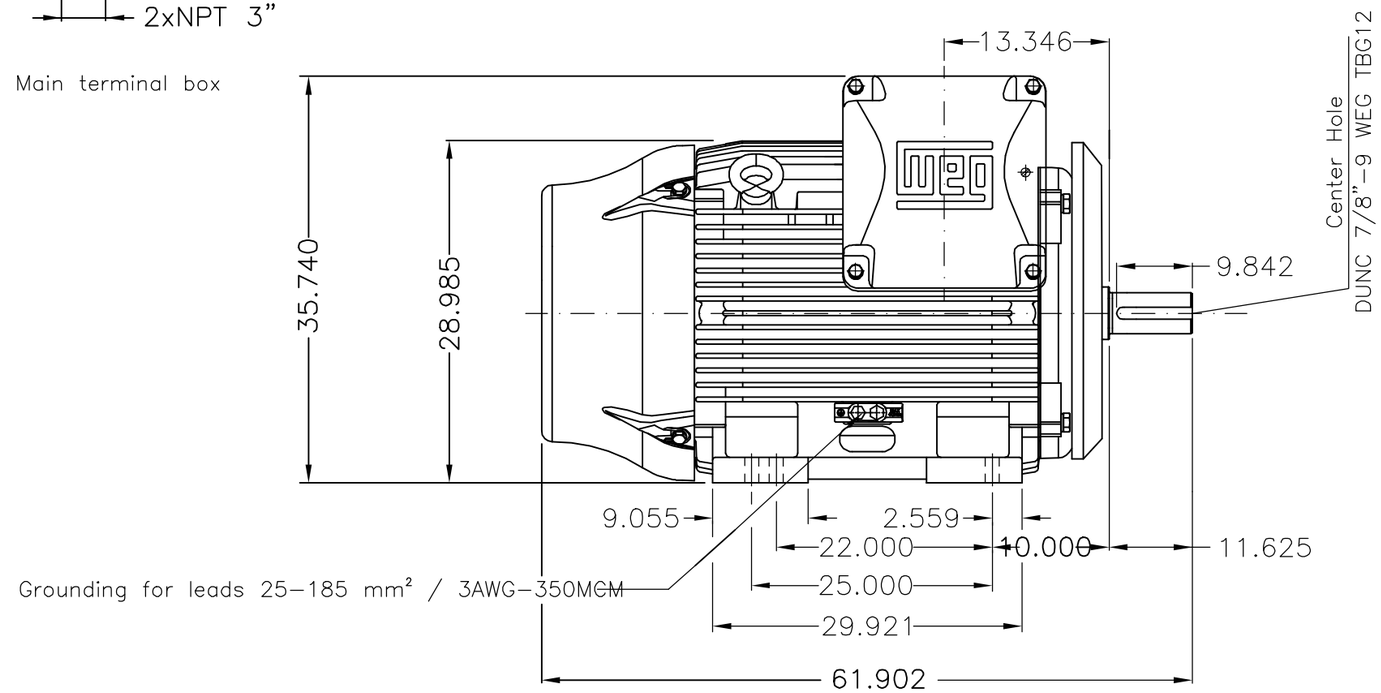

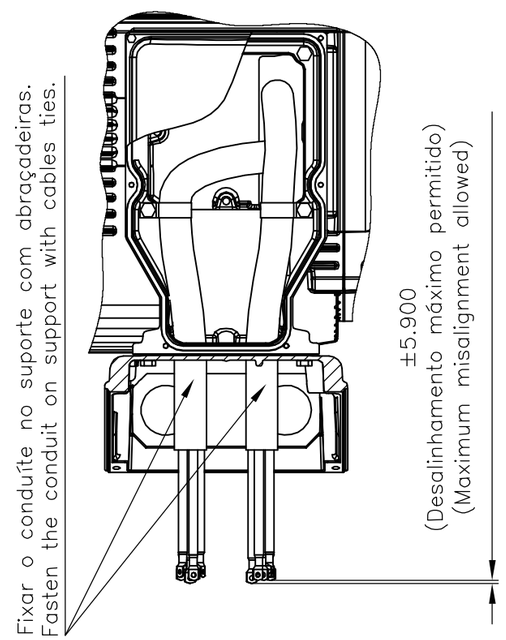

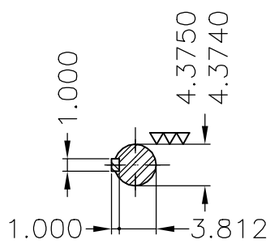

DE Shaft End

Conduite para cabos no interior do suporte da caixa de ligação Cables conduit inside terminal box support
Tampa dianteira especial / Special DE endshield
Rolamento dianteiro de rolos NU–324 / NU–324 DE roller bearing
Linha do motor: Crusher Duty / Motor purpose: Crusher Duty
Dispositivo de travamento de eixo / Shaft locking device
Proteção térmica para desligamento – termostato 155°C Thermal protection to switch off – thermostat 155°C
Tampa traseira com mancal eletricamente isolado NDE endshield with electrically insulated bearing hub
Defletor de ar dianteiro / Drive–End Air Deflector
Cor RAL 5009 / Color RAL 5009
Plano de pintura 203A / Painting plan 203A
Forma construtiva NEMA F–1 / Mounting NEMA F–1
Forma construtiva B3D / Mounting B3R(D)

WEG ELECTRIC CORPORATION - WEC

414149741/0 MEC

ECM	LOC	SUMMARY OF MODIFICATIONS	EXECUTED	CHECKED	RELEASED	DATE	VER
500002368949		REMOVIDA NOTA DE CATEGORIA A	FRANCINES	LEDUARDO	LEDUARDO	05.05.2023	05
500001346215	B2	ADDED DEFLECTOR RETAIL	SAORIN	ERIC	ERIC	10.08.2017	04

EXECUTED	DVEGINI
CHECKED	NSCHMIDT
RELEASED	NSCHMIDT
REL DT	02.05.2017

THREE PHASE W22 MOTOR - NEMA PREMIUM EFF
FRAME 586/7TZ IP55 TEFC

10004909462
000 | 05

WMO Jaragua do Sul Product Engineering

SHEET 1 / 1

500 HP 06 Poles 60Hz 414649158/0

A

UNCONTROLLED COPY

RELEASED

ZME A3

WEG's property. Forbidden reproduction without previous authorization.