EIXO/SHAFT		Dimensões em polegadas Dimensions in inches
PADRÃO/STANDARD	X	
OPCIONAL/OPTIONAL		
ESPECIAL/SPECIAL		

CERTIFIED
WEG MOTORES
Certified document.
Not subject to changes.

THIS IS AN UPDATED REVISION, THE PREVIOUS ONE MUST BE DISREGARDED.

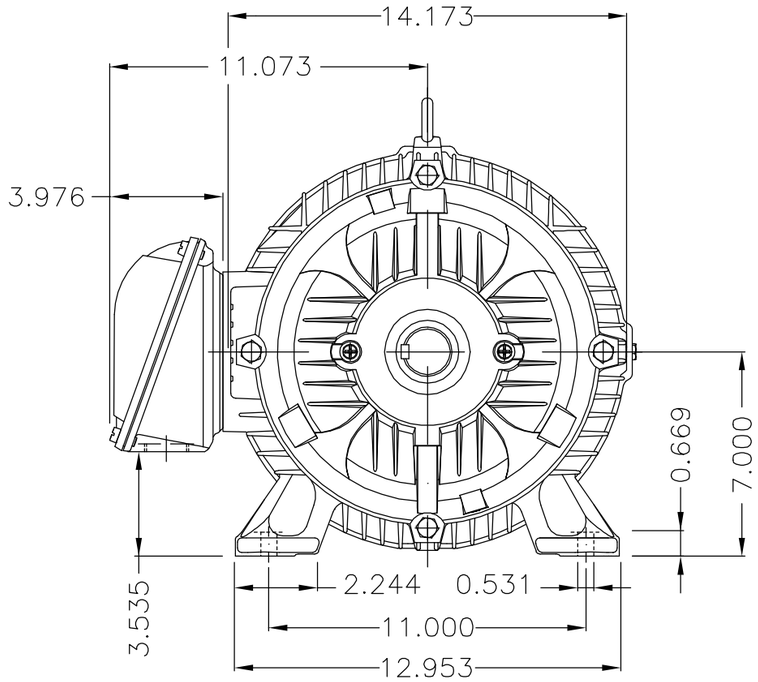

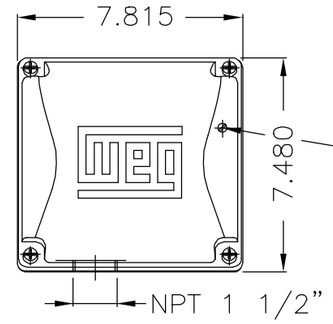

Main terminal box

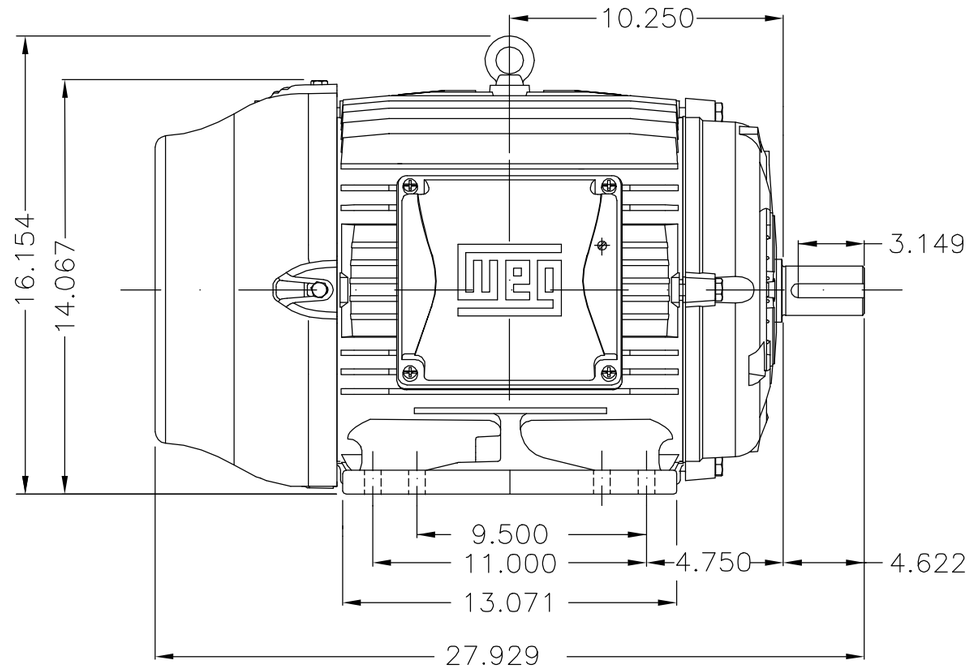

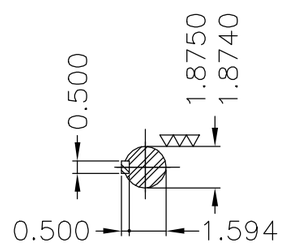

DE Shaft End

Anel interno especial de fixação do rolamento dianteiro /
Special internal fastening bearing cap of DE bearing

Kit porta escova de aterramento AEGIS SGR–63.0–3MFH / Brush holder kit AEGIS SGR–63.0–3MFH

Plano de pintura 203A / Painting plan 203A

Forma construtiva NEMA F–1 / Mounting NEMA F–1

Forma construtiva B3D / Mounting B3R(D)

WEG ELECTRIC CORPORATION – WEC

ECM	LOC	SUMMARY OF MODIFICATIONS	EXECUTED	CHECKED	RELEASED	DATE	VER
500001674319		ALTERADO CFME. CLAIM 415477818	ELIOM	ALISSON	ALISSON	20.01.2020	03
500001037256		REMOVIDO REPRESENTAÇÃO ATERR	ALESOMZ	ODORIZZI	ODORIZZI	18.07.2015	02

EXECUTED	SCARMAGNANI	THREE PHASE W22 MOTOR - NEMA PREMIUM EFF FRAME 284/6T IP55	10002804903
CHECKED	DAYANAR		000 03
RELEASED	DAYANAR		
REL DT	09.04.2014	WMO JARAGUA DO SUL ENGENHARIA DE PRODUTO	SHEET 1 / 1

20 HP	06 Poles	60Hz	413384804/0	MEC	B
15 HP	06 Poles	60Hz	413384753/0	MEC	A

UNCONTROLLED COPY

RELEASED

ZME A3

WEG's property. Forbidden reproduction without previous authorization.