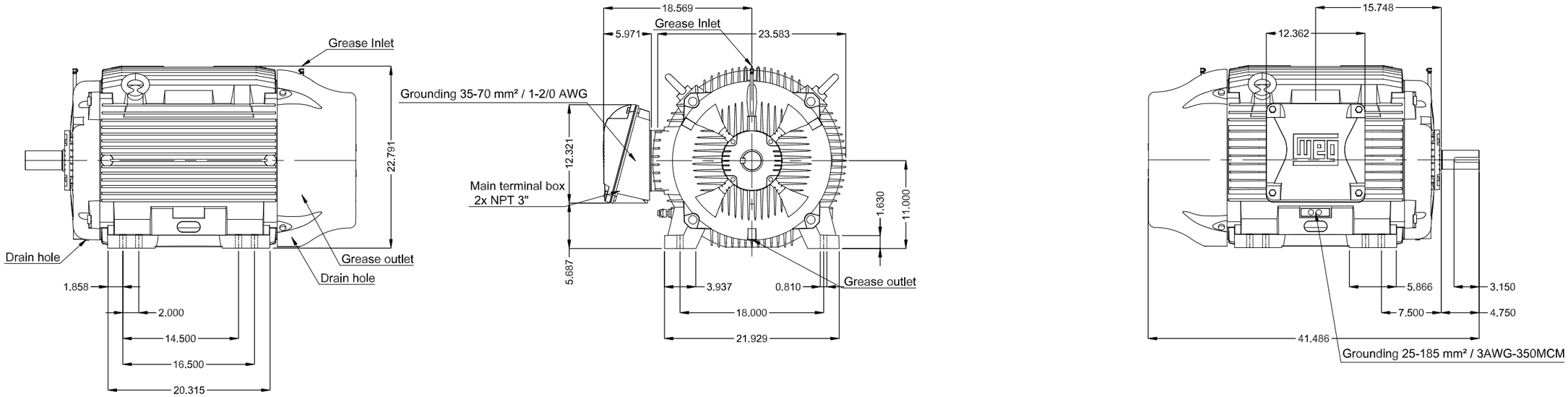

Grease outlet according to IEEE841
Color RAL 5009
Painting plan 222E
Mounting NEMA F-1
Mounting B3R(D)

DE Shaft End

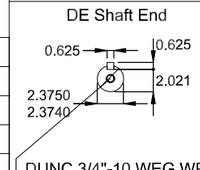

DUNC 3/4"-10 WEG WPR-7339

125 HP 02 Poles 60 Hz | A

ECM	LOC	SUMMARY OF MODIFICATIONS	EXECUTED	CHECKED	RELEASED	DATE	VER
			HYBRISUSER				00

EXECUTED	HYBRISUSER	THREE PH. MOTOR IEEE 841 W22 NEMA PREM. EFF.
CHECKED		FRAME 444/5TS IP56 TEFC
RELEASED		
REL. DATE		

PREVIEW
WDD 00
SHEET /

Dimensions in inches

A3

WEG's property. Forbidden reproduction without previous authorization.