No reproduction of this drawing is allowed written permission of WEG Motores

EIXO	
PADRÃO	X
OPCIONAL	
ESPECIAL	

Dimensões em polegadas
Dimensions in inches

CERTIFIED WEG MOTORES
Certified document. Not subject to changes.

THIS IS AN UPDATED REVISION, THE PREVIOUS ONE MUST BE DISREGARDED.

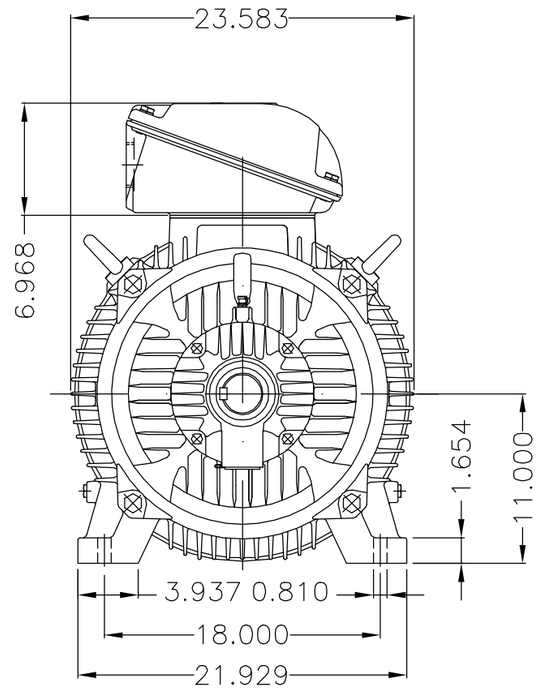

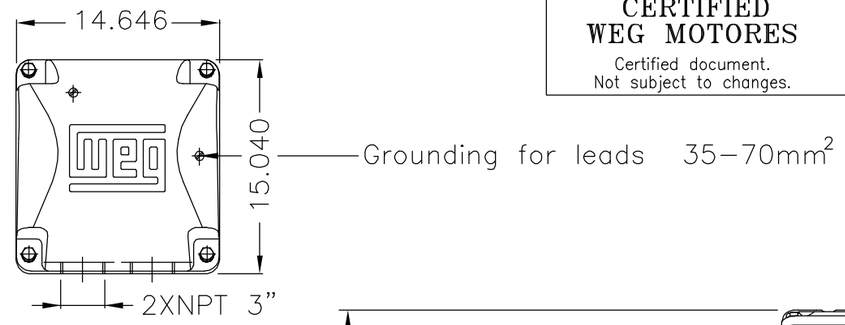

Main terminal box

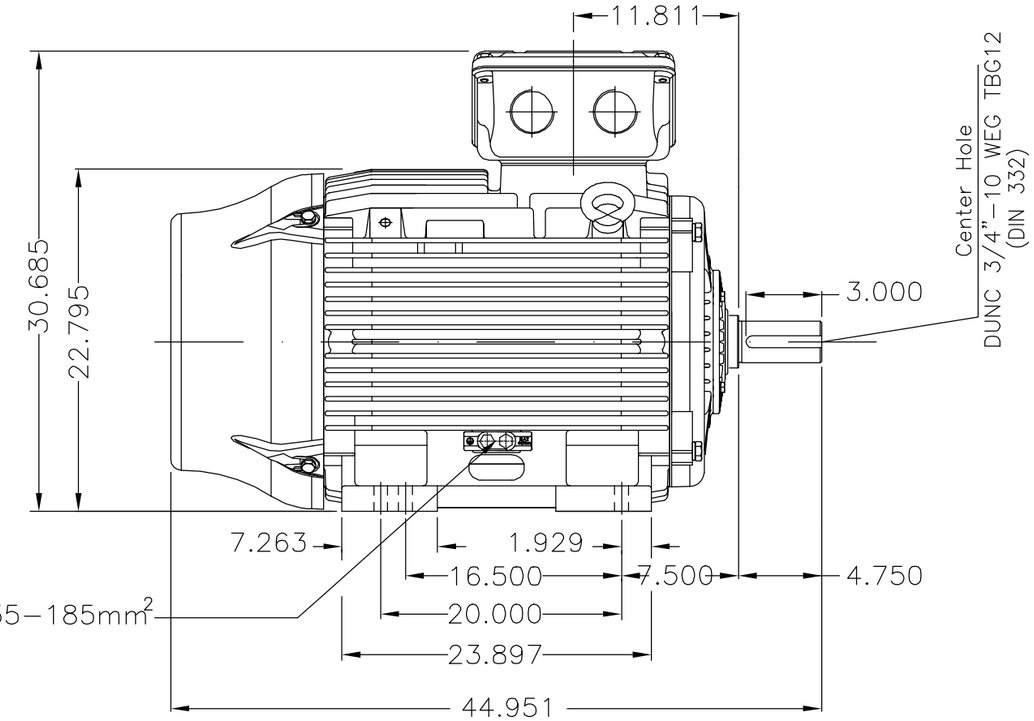

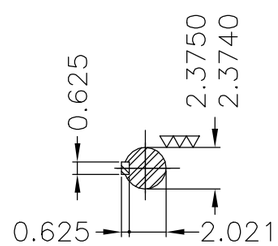

DE Shaft End

Rolamento dianteiro de rolos NU–314 com gaiola de latão usinado / NU–314 DE roller bearing with machined brass squirrel cage

Material do eixo – AISI/SAE 4140 / Shaft material – AISI/SAE 4140

Proteção térmica desligamento – Termostato 155°C / Thermostats 155°C to trip

Dispositivo de travamento de eixo / Shaft locking device

Plano de pintura 203A / Painting plan 203A

Forma construtiva B3T / Mounting B3T

WEG ELECTRIC CORPORATION – WEC

ECM	LOC	SUMMARY OF MODIFICATIONS	EXECUTED	CHECKED	RELEASED	DATE	VER
500001293996		ATUALIZADO COTA H-H	AFILHO		MENSOR	10.04.2017	04
500000953838		ALT. CONFORME NOTA 413575027	ANDREPEREIRA		MENSOR	23.10.2014	03

EXECUTED	SCARMAGNANI
CHECKED	
RELEASED	ALCIDESZ
REL DT	23.11.2011

THREE PHASE W22 MOTOR - NEMA PREMIUM EFF
FRAME 445/7TS IP55

10001526083
000 | 04

WMO JARAGUA DO SUL ENGENHARIA DE PRODUTO

SHEET 1 / 1

200 HP 02 Poles 60Hz 412320553/01 MEC

A

UNCONTROLLED COPY

RELEASED

ZME A3

WEG's property. Forbidden reproduction without previous authorization.