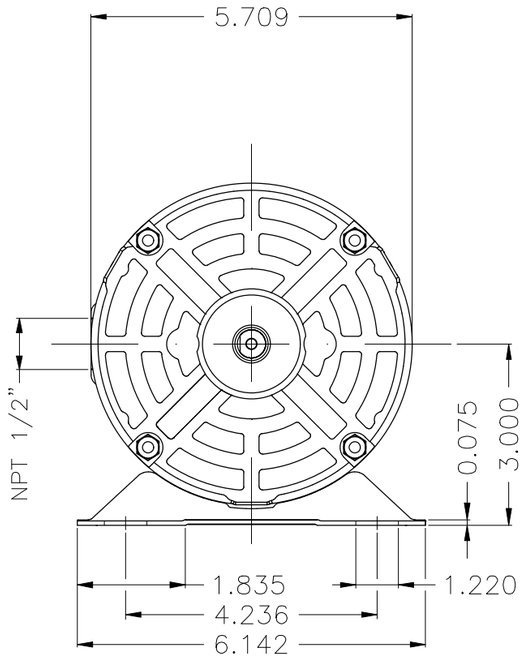

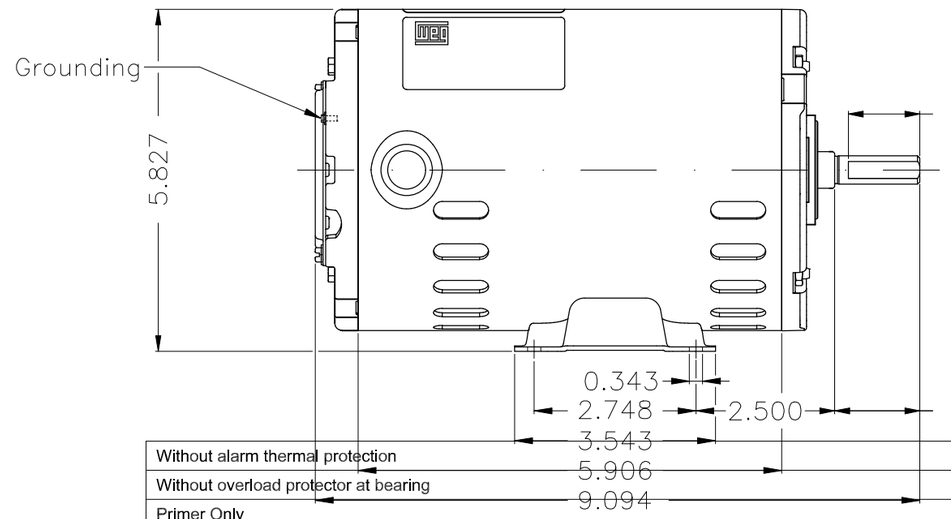

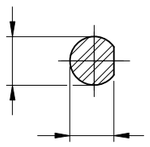

DE Shaft End

Without alarm thermal protection
Without overload protector at bearing
Primer Only
Design N
Without switch off thermal protection
Grease - Mobil Polyrex EM
Without Grease fitting
Class F insulation - 80K temperature rise
Shaft material - SAE/ABNT 1040/45
Rotation CW and CCW
Packing - cardboard box
Dipping impregnation - polyester
Without terminal block
Carbon Steel screws
Without fan
Vibration grade A
Without coating
Service factor 1.35
Mounting F-1/B3R(D)

ECM	LOC	SUMMARY OF MODIFICATIONS	EXECUTED	CHECKED	RELEASED	DATE	VER
			HYBRISUSER				00

EXECUTED	HYBRISUSER	SINGLE PH. MOTOR ROLLED STEEL	PREVIEW
CHECKED		FRAME 48 IP21 ODP	WDD 00
RELEASED			
REL. DATE		WMO Jaragua do Sul Product Engineering	SHEET 1 / 1

0.25 HP 04 Poles 60 Hz

A

Dimensions in inches

A3

XME

WEG's property. Forbidden reproduction without previous authorization.