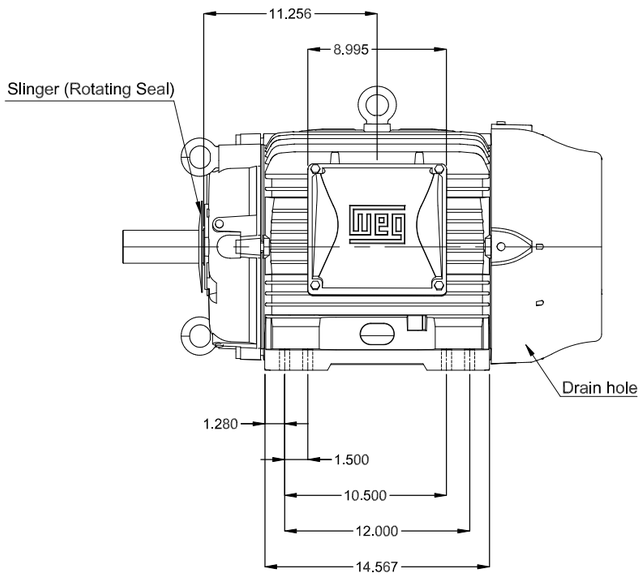


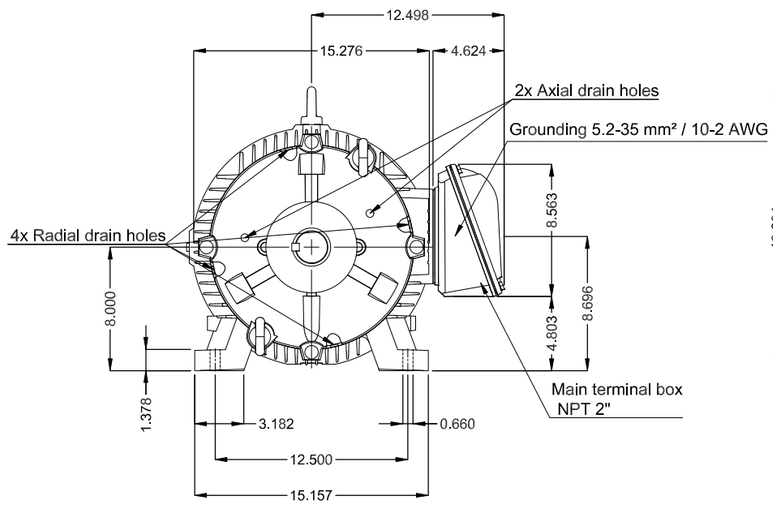


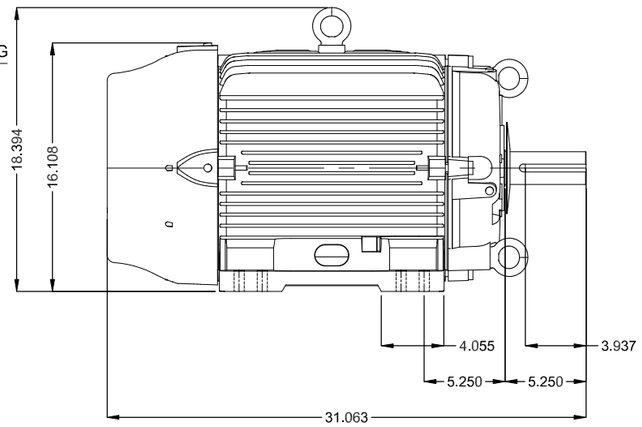


Color RAL 5009

Painting plan 222E

Mounting NEMA F-2

Mounting B3L(E)

DE Shaft End

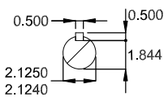


10/40 HP 08/04 Poles 60 Hz | A

| ECM | LOC | SUMMARY OF MODIFICATIONS | EXECUTED | CHECKED | RELEASED | DATE | VER |
|---|---|---|---|---|---|---|---|
| | | | HYBRISUSER | | | | 00 |

| | | |
|---|---|---|
| EXECUTED | HYBRISUSER | THREE PH. MOTOR COOLING TOWER W22 HIGH EFF. |
| CHECKED | | FRAME 324/6T IP55 TEFC |
| RELEASED | | |
| REL. DATE | | |

PREVIEW

WDD 00

SHEET /

Dimensions in inches

A3

WEG's property. Forbidden reproduction without previous authorization.