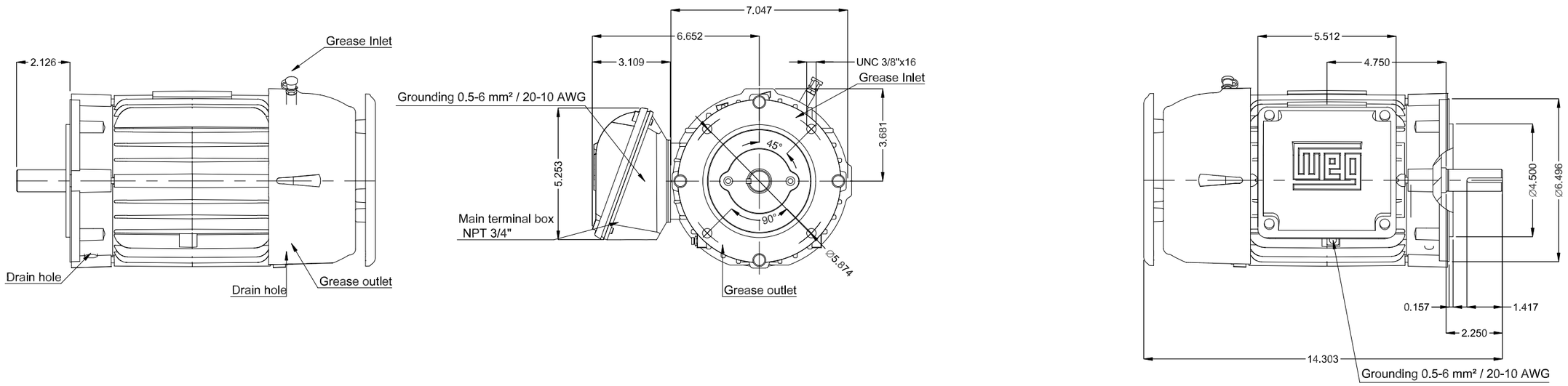

DE Shaft End

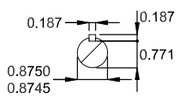

Grease outlet according to IEEE841
Color RAL 5009
Painting plan 202E
Mounting NEMA W-6
Mounting V18

1.5 HP 04 Poles 60 Hz | A

ECM	LOC	SUMMARY OF MODIFICATIONS	EXECUTED	CHECKED	RELEASED	DATE	VER
			HYBRISUSER				00

EXECUTED	HYBRISUSER
CHECKED	
RELEASED	
REL. DATE	

THREE PH. MOTOR IEEE 841 W22 NEMA PREM. EFF.
FRAME 145TC IP56 TEFC

PREVIEW
WDD 00
SHEET /

Dimensions in inches

A3

WEG's property. Forbidden reproduction without previous authorization.