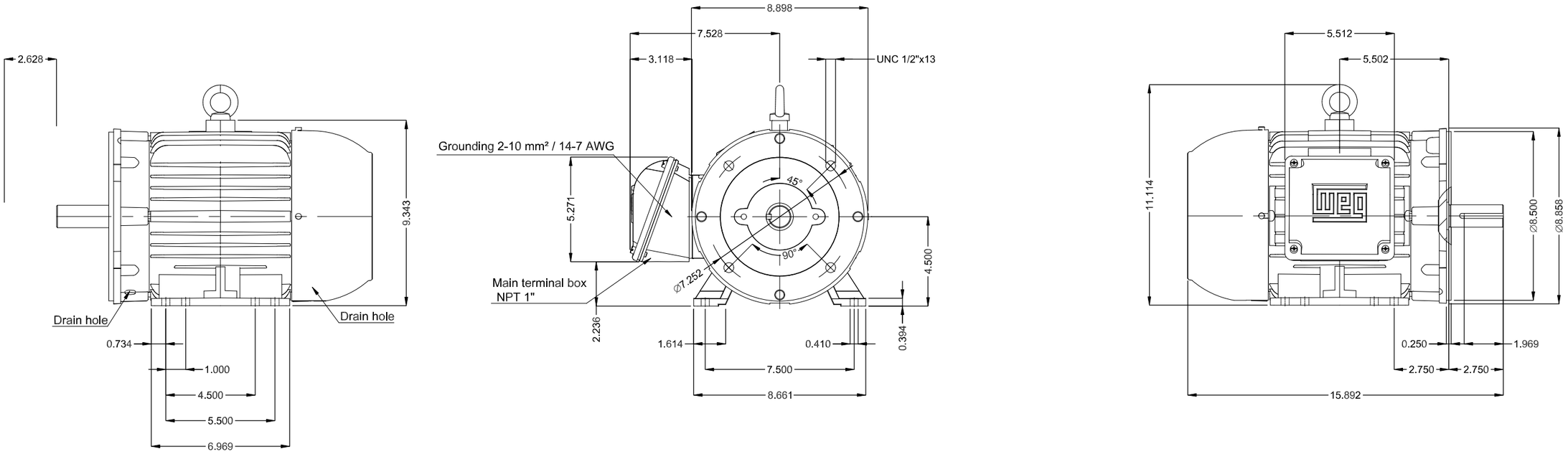

DE Shaft End

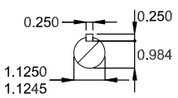

Bearing cap
Color RAL 5009
Painting plan 207A
Mounting B34R(D)

5 HP 04 Poles 60 Hz | A

ECM	LOC	SUMMARY OF MODIFICATIONS	EXECUTED	CHECKED	RELEASED	DATE	VER
			HYBRISUSER				00

EXECUTED	HYBRISUSER
CHECKED	
RELEASED	
REL. DATE	

THREE PH. MOTOR W22 NEMA PREM. EFF.
FRAME 182/4TC IP55 TEFC

PREVIEW

WDD 00

SHEET /

Dimensions in inches

A3

WEG's property. Forbidden reproduction without previous authorization.