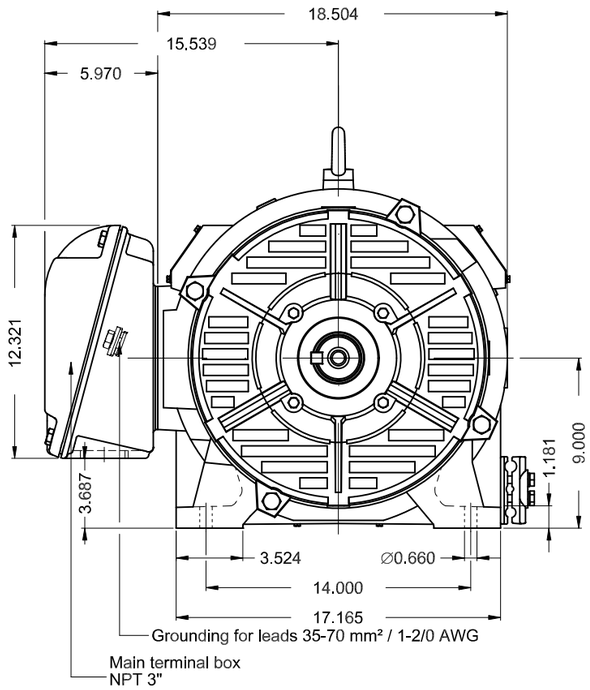

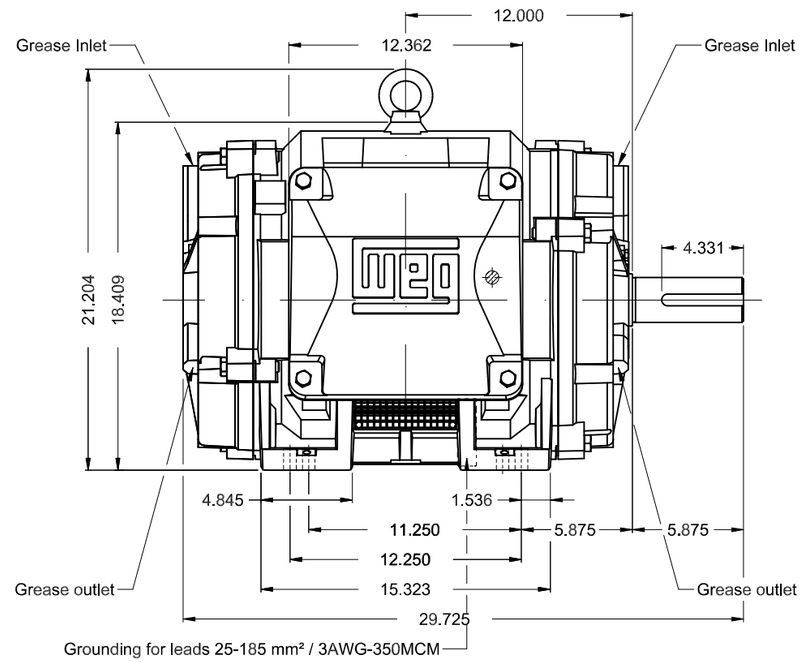

Color RAL 5009

Painting plan 203A

Mounting NEMA F-1

Mounting B3R(D)

DE Shaft End

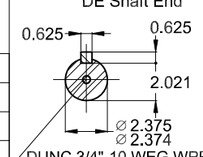

60 HP 04 Poles 60 Hz | A

1:8

ECM	LOC	SUMMARY OF MODIFICATIONS	EXECUTED	CHECKED	RELEASED	DATE	VER
			HYBRISUSER				00

EXECUTED	HYBRISUSER	THREE PH. MOTOR W40 NEMA PREM. EFF.	PREVIEW
CHECKED		FRAME 364/5T IP23 ODP	WDD 00
RELEASED			
REL. DATE		WMO Jaragua do Sul Product Engineering	SHEET 1 / 1

Dimensions in inches

A3

XME

WEG's property. Forbidden reproduction without previous authorization.