No reproduction of this drawing is allowed written permission of WEG Motores

EIXO		
PADRÃO	X	Dimensões em polegadas
OPCIONAL		Dimensions in inches
ESPECIAL		

CERTIFIED
WEG MOTORES
Certified document.
Not subject to changes.

THIS IS AN UPDATED REVISION, THE PREVIOUS ONE MUST BE DISREGARDED.

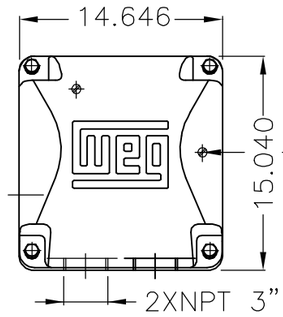

Main terminal box

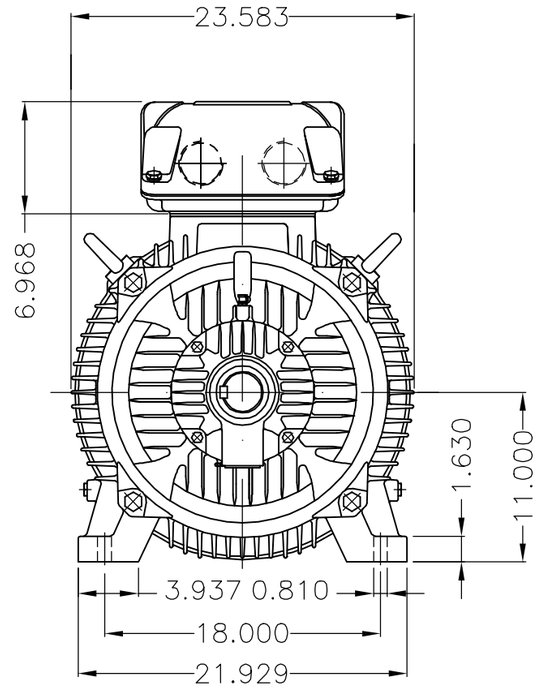

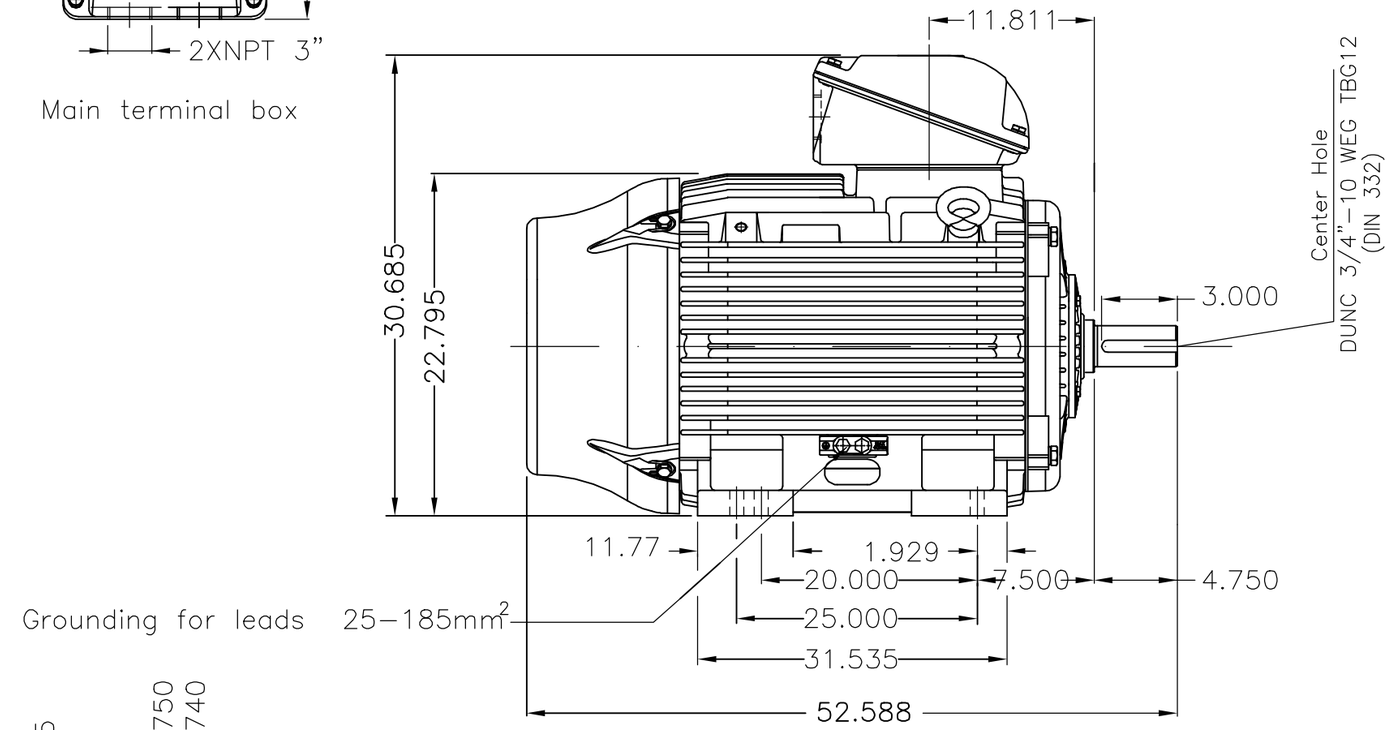

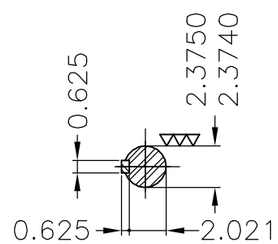

DE Shaft End

Rolamento dianteiro de rolos NU–314 com gaiola de latão usinada / NU–314 DE roller bearing with machined brass squirrel cage
Graxa – Isoflex NBU–15 / Isoflex NBU–15 grease
Dispositivo de travamento de eixo / Shaft locking device
Proteção térmica desligamento – Termostato 155°C / Thermostats 155°C to trip
Saída dos cabos voltada para a traseira / Cables outlet directed to NDE
Rolamento dianteiro de rolos / DE roller bearing
Plano de pintura 203A / Painting plan 203A
Forma construtiva B3T / Mounting B3T

WEG ELECTRIC CORPORATION – WEC

ECM	LOC	SUMMARY OF MODIFICATIONS	EXECUTED	CHECKED	RELEASED	DATE	VER
500001293996		ATUALIZADO COTA H-H	AFILHO		MENSOR	10.04.2017	03
500000821834		ALT. CONFORME ECM 500000821834	SCHENKEL		RICARDOAN	08.11.2013	02

EXECUTED	SCARMAGNANI	THREE PHASE W22 MOTOR - NEMA PREMIUM EFF	10002256032
CHECKED		FRAME 447/9TS IP55	000 03
RELEASED	CVITORINO		
REL DT	07.05.2013	WMO JARAGUA DO SUL ENGENHARIA DE PRODUTO	SHEET 1 / 1

300 HP 02 Poles 60Hz 412808507/0 MEC

A

UNCONTROLLED COPY

RELEASED

ZME A3

WEG's property. Forbidden reproduction without previous authorization.