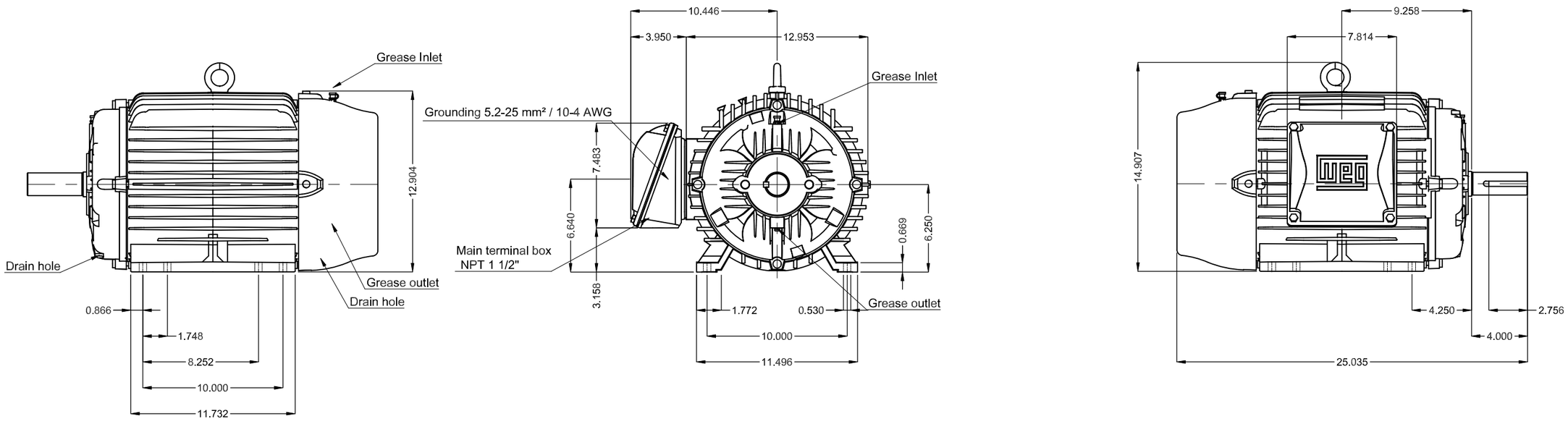

DE Shaft End

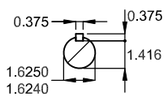

Without vertical jackscrews
Color RAL 5009
Painting plan 203A
Mounting B3R(D)

7.5 HP 06 Poles 60 Hz | A

ECM	LOC	SUMMARY OF MODIFICATIONS	EXECUTED	CHECKED	RELEASED	DATE	VER
			HYBRISUSER				00

EXECUTED	HYBRISUSER
CHECKED	
RELEASED	
REL. DATE	

THREE PH. MOTOR W22 NEMA PREM. EFF.
FRAME 254/6T IP55 TEFC

PREVIEW
WDD 00
SHEET /

Dimensions in inches

A3

WEG's property. Forbidden reproduction without previous authorization.