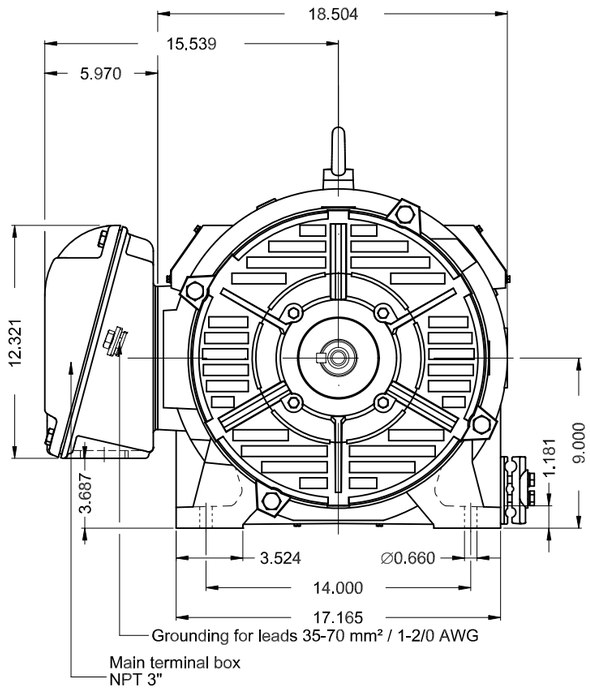

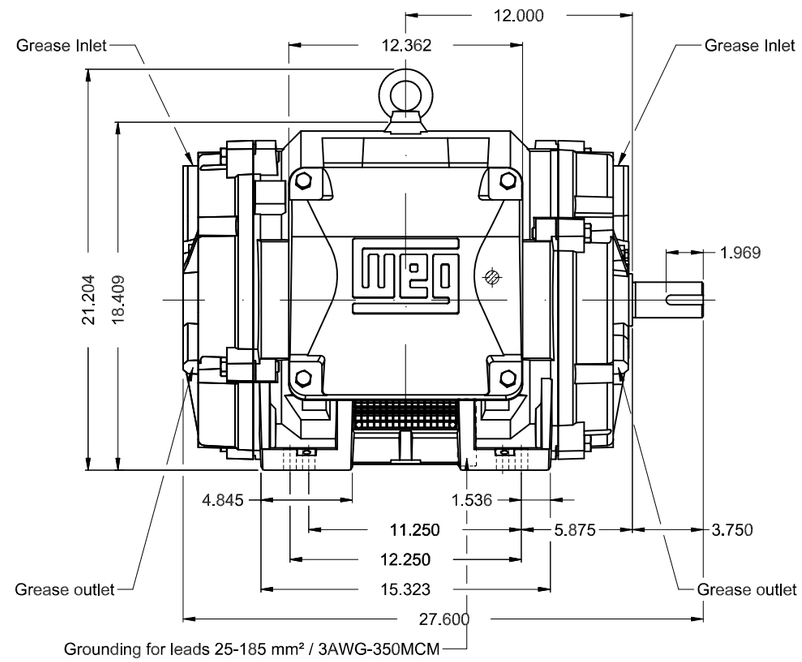

Internal AEGIS ground ring on the DE
Color RAL 5009
Painting plan 203A
Mounting NEMA F-1
Mounting B3R(D)

DE Shaft End

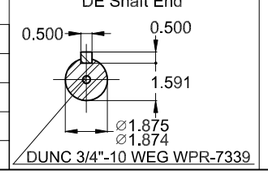

100 HP 02 Poles 60 Hz | A

1:8

ECM	LOC	SUMMARY OF MODIFICATIONS	EXECUTED	CHECKED	RELEASED	DATE	VER
			HYBRISUSER				00

EXECUTED	HYBRISUSER	THREE PH. MOTOR W40 NEMA PREM. EFF.
CHECKED		FRAME 364/5TS IP23 ODP
RELEASED		
REL. DATE		WMO Jaragua do Sul Product Engineering

PREVIEW
WDD 00
SHEET 1 / 1

Dimensions in inches
A3
XME

WEG's property. Forbidden reproduction without previous authorization.