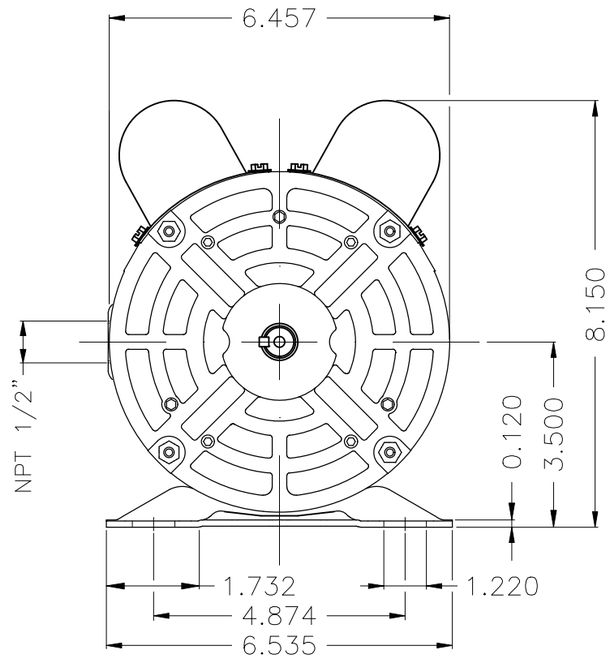

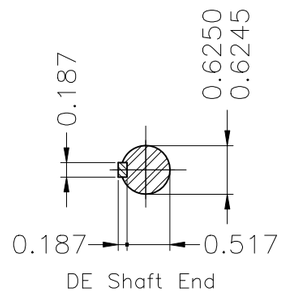

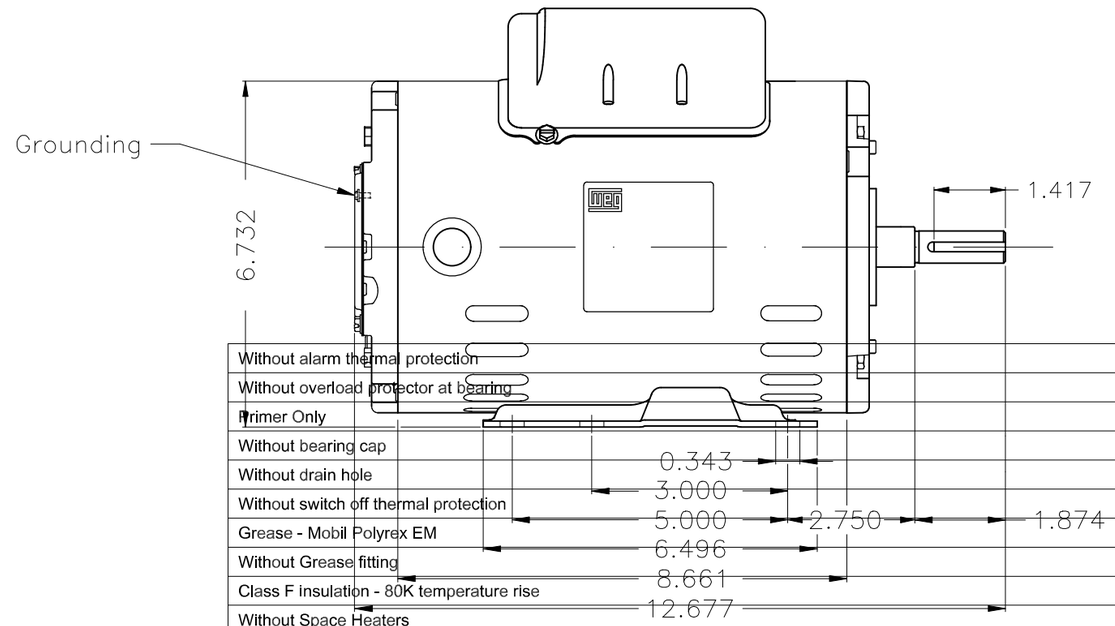

Without alarm thermal protection
Without overload protector at bearing
Primer Only
Without bearing cap
Without drain hole
Without switch off thermal protection
Grease - Mobil Polyrex EM
Without Grease fitting
Class F insulation - 80K temperature rise
Without Space Heaters
NDE-bearing with double shield-ZZ
Shaft material - SAE/ABNT 1040/45
Rotation CW and CCW
Packing - cardboard box
Dipping impregnation - polyester
Without terminal block
DE-bearing with double shield-ZZ
Carbon Steel screws
Design A
Without fan
A key
Without bearing sealing
Vibration grade A
Without coating
Mounting F-1/B3R(D)

ECM	LOC	SUMMARY OF MODIFICATIONS	EXECUTED	CHECKED	RELEASED	DATE	VER
			HYBRISUSER				00

EXECUTED	HYBRISUSER	SINGLE PH. MOTOR ROLLED STEEL PREM. EFF.	PREVIEW
CHECKED		FRAME 56H IP21 ODP	WDD 00
RELEASED			
REL. DATE		WMO Jaragua do Sul Product Engineering	SHEET 1 / 1

2 HP 02 Poles 60 Hz

A

Dimensions in inches

XME A3

WEG's property. Forbidden reproduction without previous authorization.