No reproduction of this drawing is allowed written permission of WEG Motores

EIXO	
PADRÃO	X
OPCIONAL	
ESPECIAL	

Dimensões em polegada
Dimensions in inches

THIS IS AN UPDATED REVISION, THE PREVIOUS ONE MUST BE DISREGARDED.

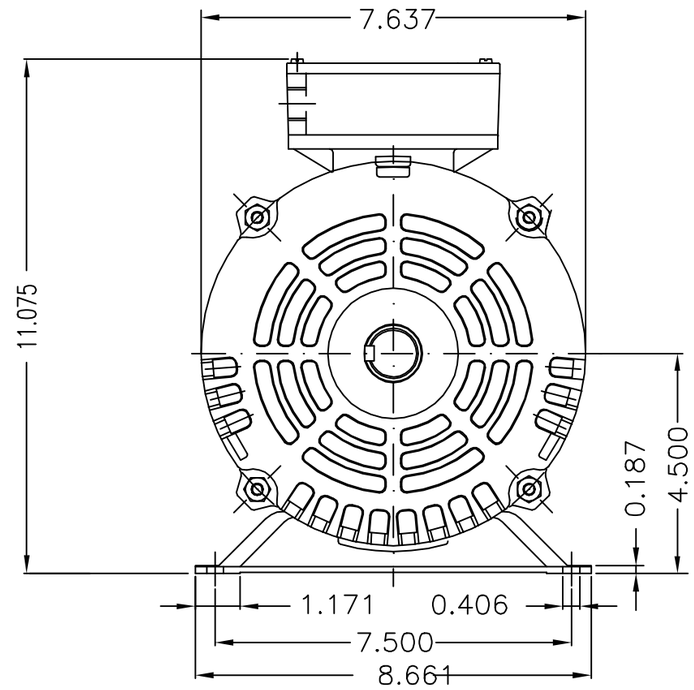

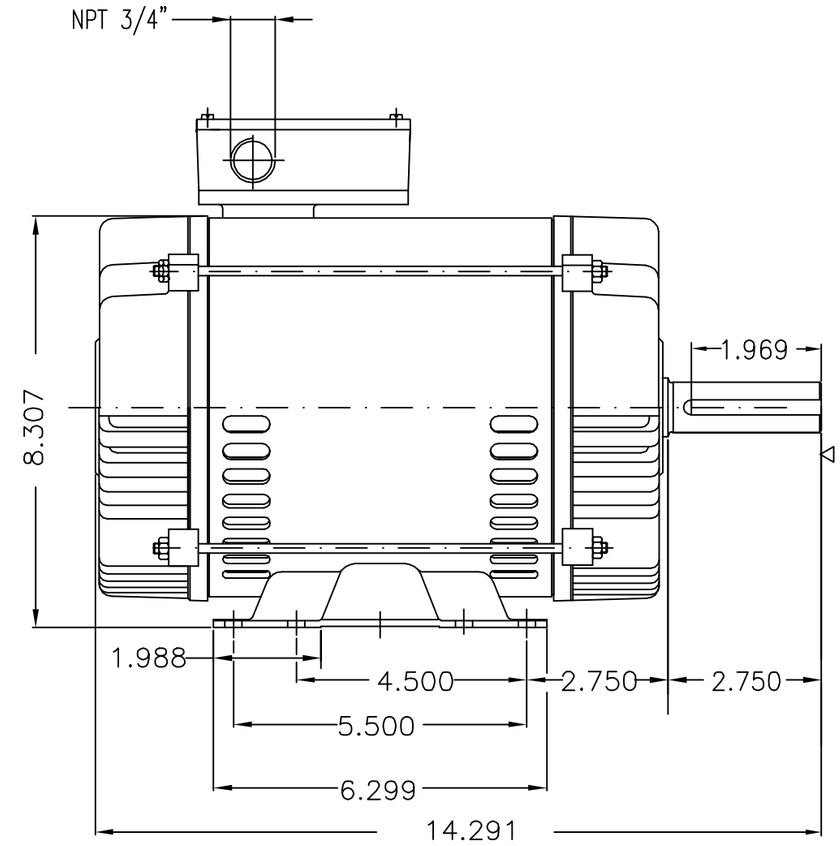

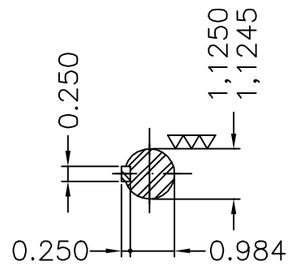

Forma construtiva B3T / Mounting B3T

WEG ELECTRIC MOTORS CORP.

MODIF. NUMBER	LOC	SUMMARY OF MODIFICATIONS	EXECUTED	CHECKED	RELEASED	DATE	VER
500000223207		GERAR PDF	RICLAV		LUISS	16.09.2009	01
500000002434			RVIEIRA		ADRIANAP	22.08.2008	00

EXECUTED	RVIEIRA
CHECKED	
RELEASED	ADRIANAP
REL. DATE	22.08.2008

TH. PHASE NEMA PREMIUM EFFICIENCY MOTOR
FRAME 184 IP21

E4013393
000 01

WMO JARAGUA DO SUL ENG. MOTORES INDUSTRIAIS

FOL/SHEET 01 / 01

5 CV 4 POLE 60 Hz X11496.03 MEC

A

UNCONTROLLED COPY

RELEASED

ZME-

Propriedade da WEG. Proibida reprodução sem autorização prévia./WEG's property. Forbidden reproduction without previous authorization.