No reproduction of this drawing is allowed written permission of WEG Motores

EIXO		
PADRÃO	X	Dimensões em polegadas
OPCIONAL		Dimensions in inches
ESPECIAL		

CERTIFIED WEG MOTORES
Certified document. Not subject to changes.

THIS IS AN UPDATED REVISION, THE PREVIOUS ONE MUST BE DISREGARDED.

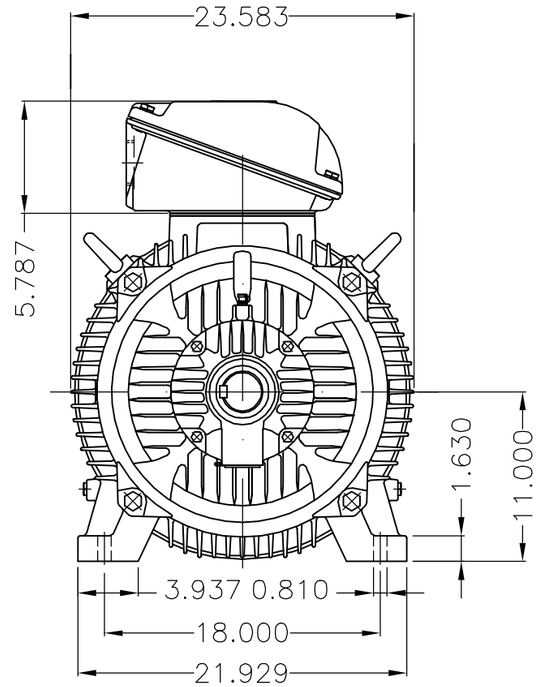

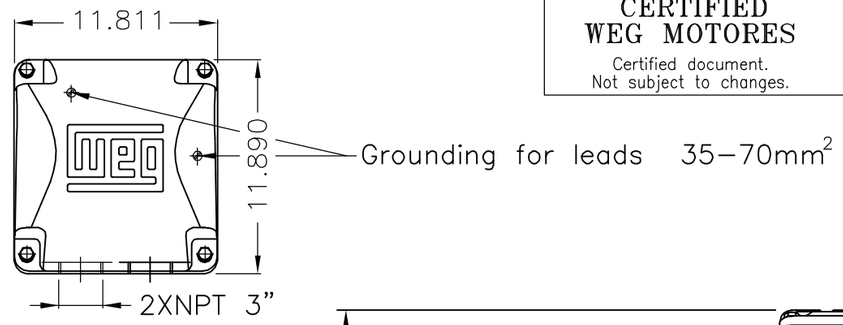

Main terminal box

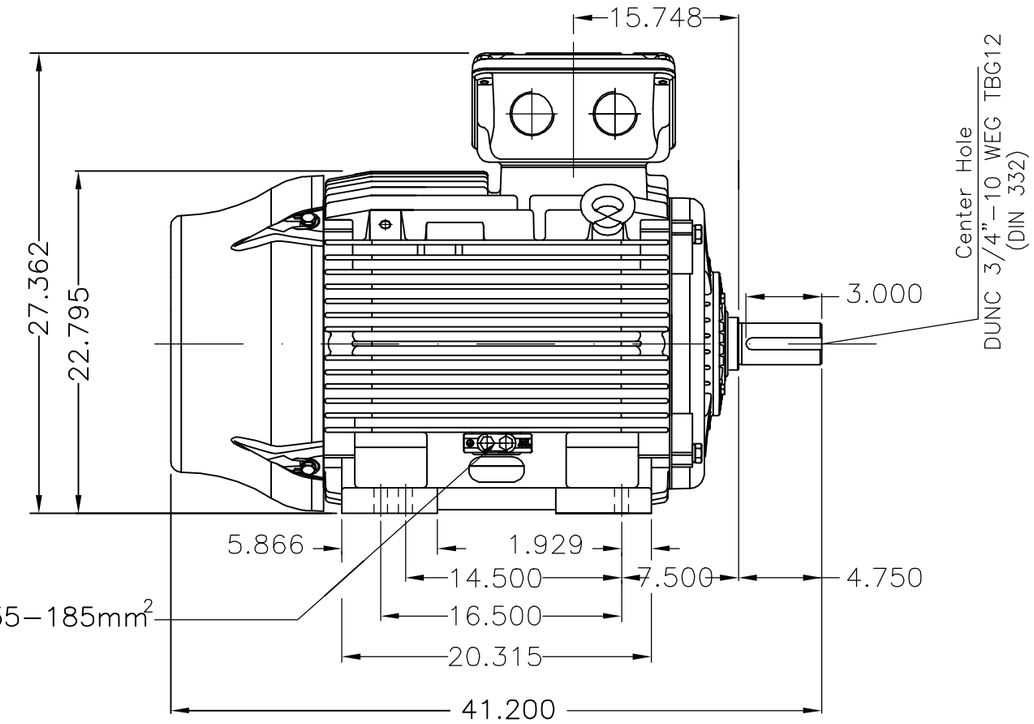

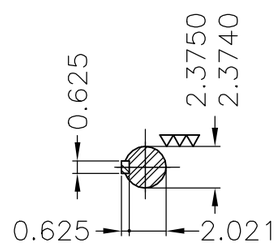

DE Shaft End

Rolamento dianteiro de rolos NU–314 com gaiola de latão usinado / NU–314 DE roller bearing with machined brass squirrel cage

Proteção térmica desligamento – Termostato 155°C / Thermostats 155°C to trip

Dispositivo de travamento de eixo / Shaft locking device

Material do eixo – AISI/SAE 4140 / Shaft material – AISI/SAE 4140

Plano de pintura 203A / Painting plan 203A

Forma construtiva B3T / Mounting B3T

WEG ELECTRIC CORPORATION – WEC

ECM ECM	LOC LOC	RESUMO MODIFICAÇÃO SUMMARY OF MODIFICATIONS	EXECUTADO EXECUTED	VERIFICADO CHECKED	LIBERADO RELEASED	DATA DATE	VER VER
500000799977		ALT. CONF ECM 500000799977	DCARDOSO		RICARDOAN	19.09.2013	01
500000537327		DOCUMENTO NOVO	SCARMAGNANI		ALCIDESZ	27.10.2011	00

EXEC. /EXECUTED	SCARMAGNANI	THREE PHASE W22 MOTOR - NEMA PREMIUM EFF	10001491306
VERIF. /CHECKED		FRAME 444/5TS IP55	000 / 01
LIBER. /RELEASED	ALCIDESZ		
DATA LB /REL DT	27.10.2011	WMO JARAGUA DO SUL ENGENHARIA DE PRODUTO	FOLHA/SHEET 1 / 1

125 HP 02 Poles 60Hz 412295371/0 MEC

A

UNCONTROLLED COPY

RELEASED

A3

ZME

Propriedade da WEG. Proibida reprodução sem autorização prévia. / WEG's property. Forbidden reproduction without previous authorization.