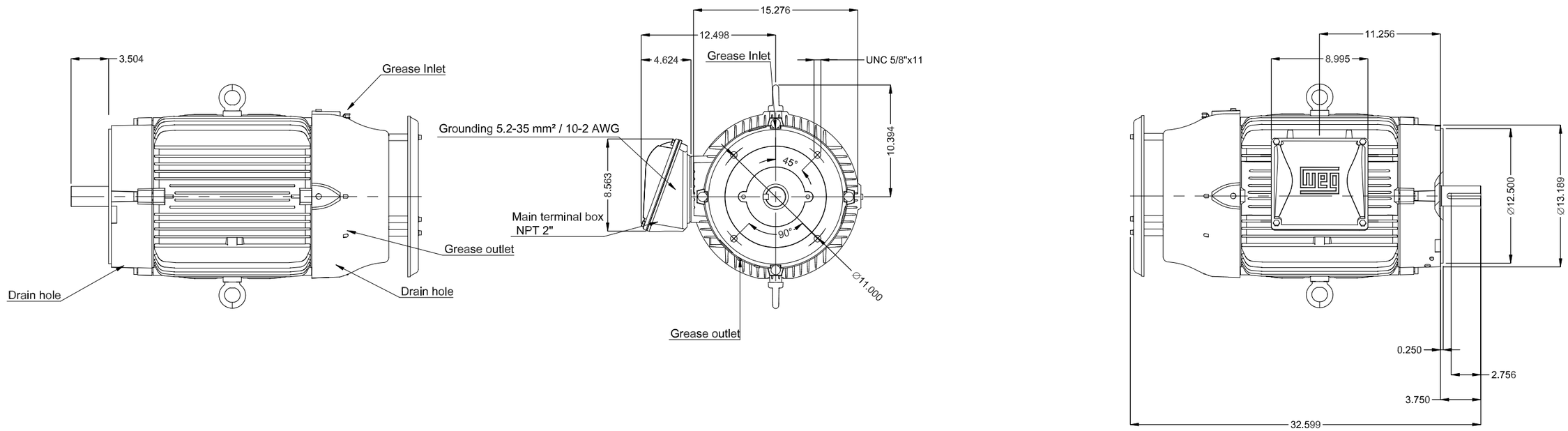


Without vertical jackscrews
TS shaft end
Color RAL 5009
Painting plan 203A
Mounting NEMA W-6
Mounting V18

DE Shaft End

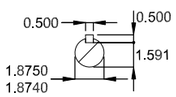


30 HP 06 Poles 60 Hz | A

| ECM | LOC | SUMMARY OF MODIFICATIONS | EXECUTED | CHECKED | RELEASED | DATE | VER |
|---|---|---|---|---|---|---|---|
| | | | HYBRISUSER | | | | 00 |

| | |
|---|---|
| EXECUTED | HYBRISUSER |
| CHECKED | |
| RELEASED | |
| REL. DATE | |

THREE PH. MOTOR W22 NEMA PREM. EFF.
FRAME 326TSC IP55 TEFC

PREVIEW
WDD 00
SHEET /

Dimensions in inches

A3

WEG's property. Forbidden reproduction without previous authorization.