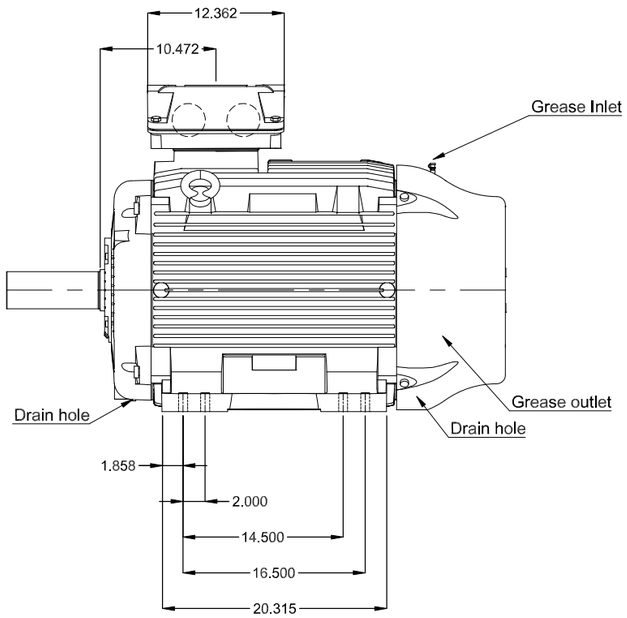

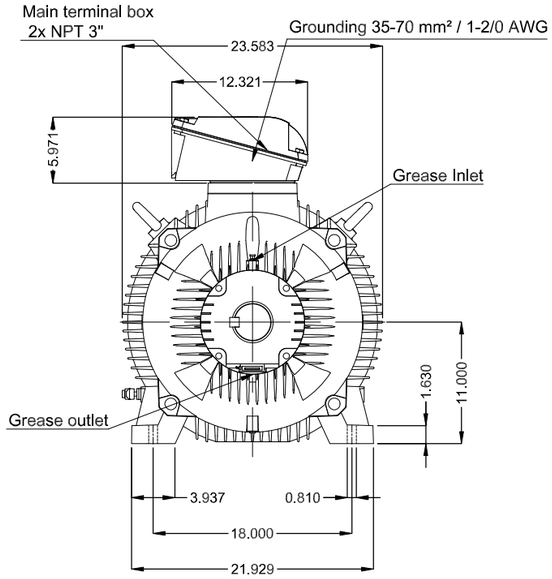

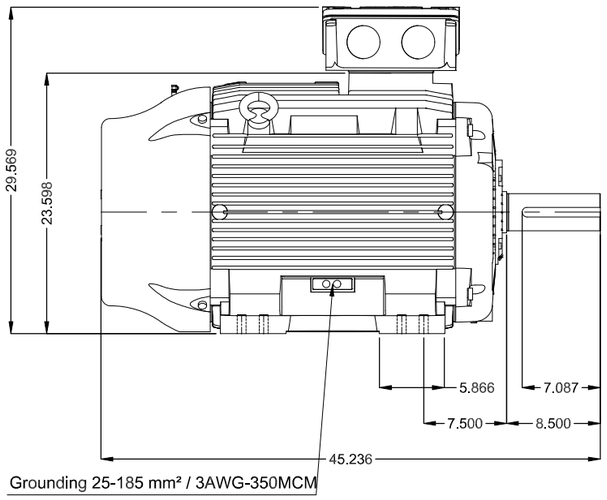

Without vertical jackscrews
DE roller bearing
Thermal protection to switch off - thermostat 155°C
Shaft locking device
Color RAL 5009
Painting plan 203A
Mounting B3T

DE Shaft End

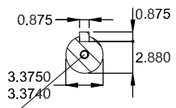

DUNC 3/4"-10 WEG WPR-7339

125 HP 04 Poles 60 Hz | A

ECM	LOC	SUMMARY OF MODIFICATIONS	EXECUTED	CHECKED	RELEASED	DATE	VER
			HYBRISUSER				00

EXECUTED	HYBRISUSER
CHECKED	
RELEASED	
REL. DATE	

THREE PH. MOTOR W22 NEMA PREM. EFF.
FRAME 444/5T IP55 TEFC

PREVIEW
WDD 00
SHEET /

Dimensions in inches

A3

WEG's property. Forbidden reproduction without previous authorization.