No reproduction of this drawing is allowed written permission of WEG Motores

EIXO		
PADRÃO	X	Dimensões em polegadas
OPCIONAL		Dimensions in inches
ESPECIAL		

CERTIFIED WEG MOTORES
Certified document. Not subject to changes.

THIS IS AN UPDATED REVISION, THE PREVIOUS ONE MUST BE DISREGARDED.

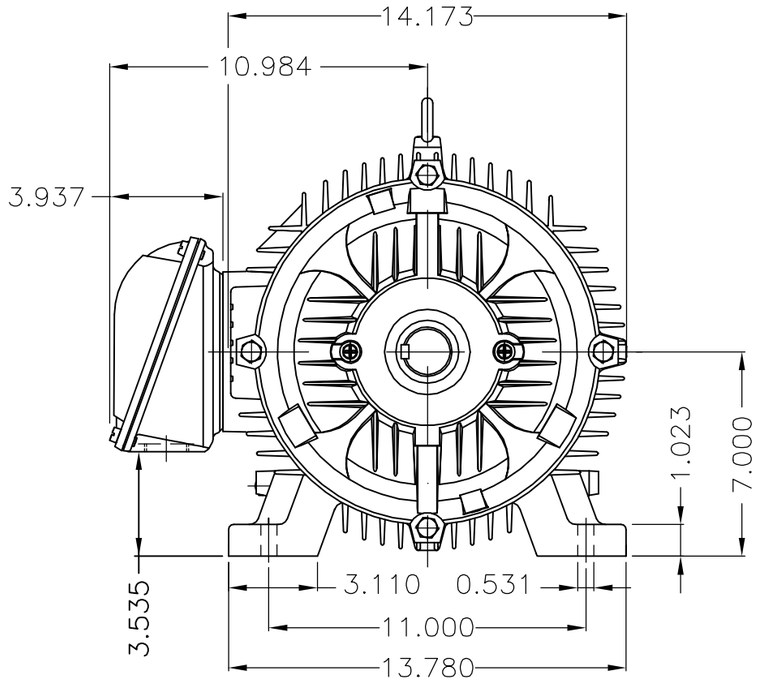

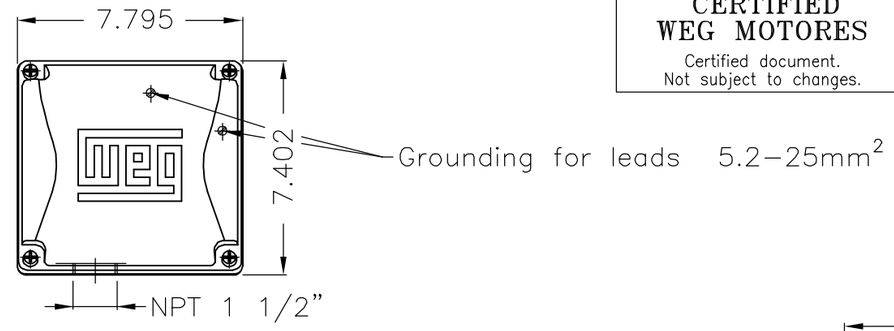

Main terminal box

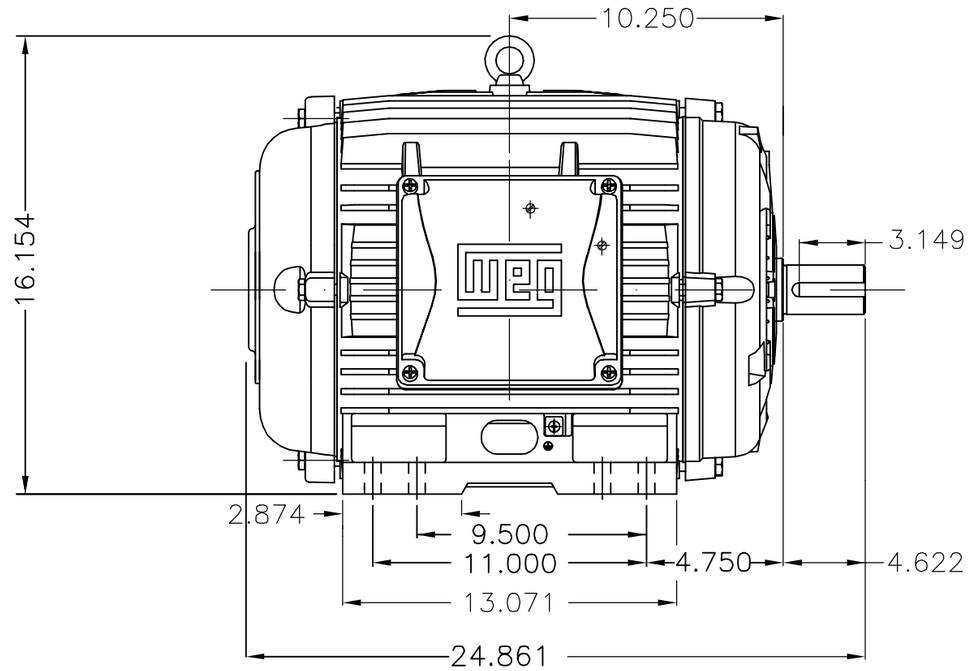

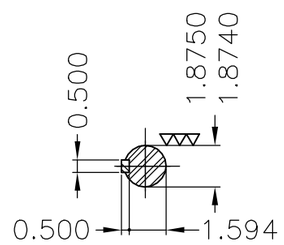

DE Shaft End

15 HP	06 Poles	60Hz	413003280/0	A
10 HP	08 Poles	60Hz	413003199/0	A

Plano de pintura 203A / Painting plan 203A
Forma construtiva B3D / Mounting B3R(D)

WEG ELECTRIC CORPORATION – WEC

ECM	LOC	SUMMARY OF MODIFICATIONS	EXECUTED	CHECKED	RELEASED	DATE	VER
500000787774		DOCUMENTO NOVO	SCARMAGNANI		DFRANCISCO	20.08.2013	00

EXECUTED	SCARMAGNANI	THREE PHASE W22 MOTOR - NEMA PREMIUM EFF
CHECKED		FRAME 284/6T IP55
RELEASED	DFRANCISCO	
REL DT	20.08.2013	WMO JARAGUA DO SUL ENGENHARIA DE PRODUTO

10002430867
000 | 00
SHEET 1 / 1

UNCONTROLLED COPY
RELEASED
ZME A3

WEG's property. Forbidden reproduction without previous authorization.