No reproduction of this drawing is allowed written permission of WEG Motores

EIXO		
PADRÃO	X	Dimensões em polegadas
OPCIONAL		Dimensions in inches
ESPECIAL		

CERTIFIED WEG MOTORES
Certified document. Not subject to changes.

THIS IS AN UPDATED REVISION, THE PREVIOUS ONE MUST BE DISREGARDED.

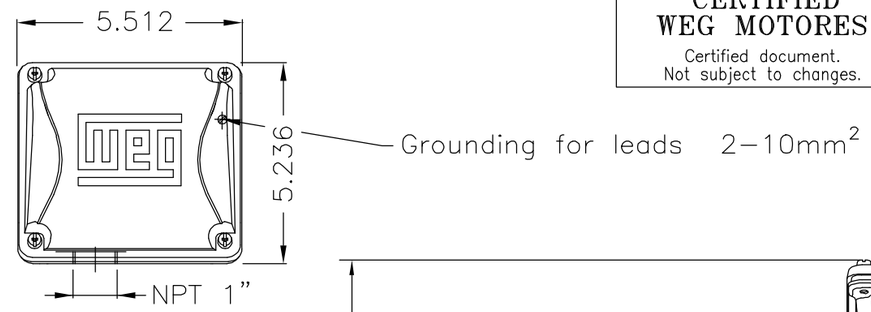

Main terminal box

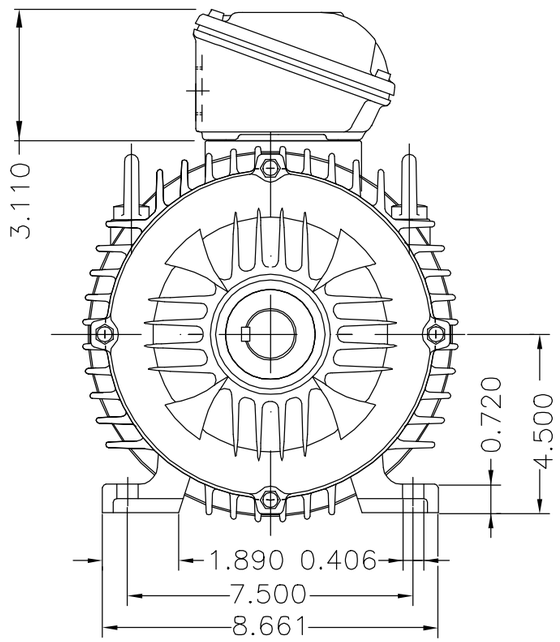

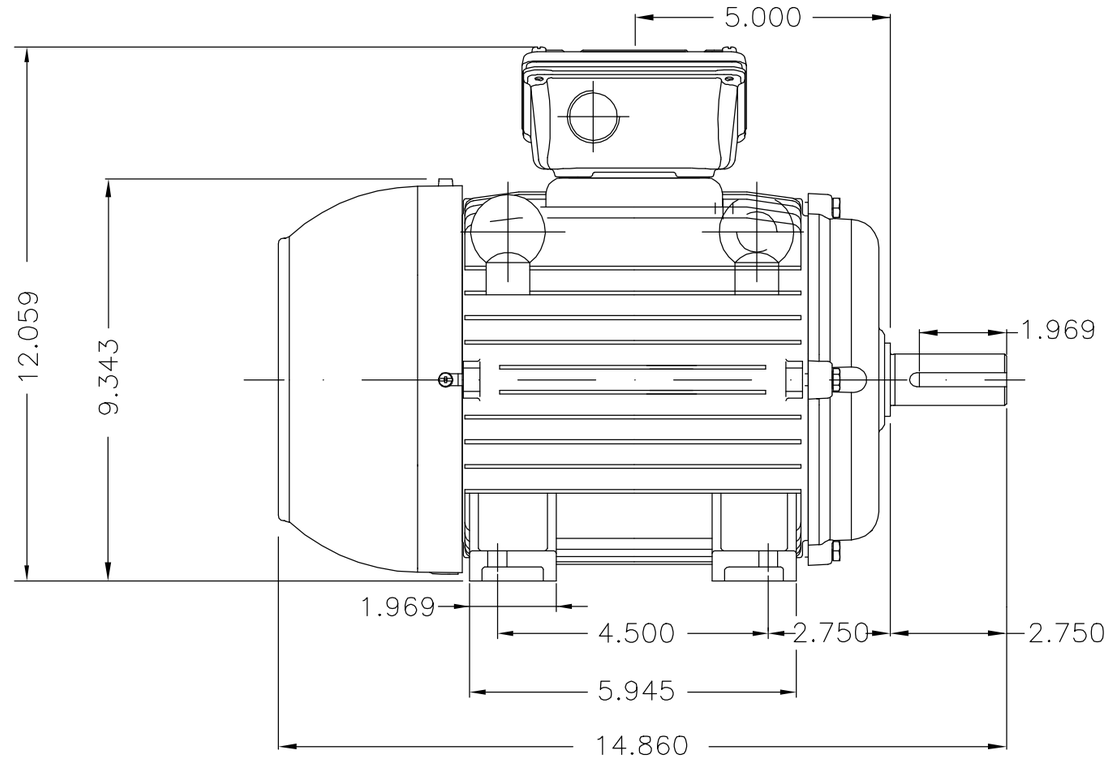

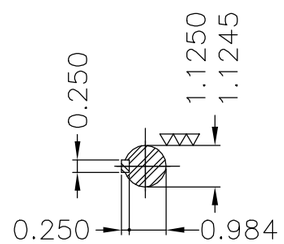

DE Shaft End

Carcaça especial / Special frame
Plano de pintura 207A / Painting plan 207A
Forma construtiva B3T / Mounting B3T

WEG ELECTRIC CORPORATION − WEC

ECM	LOC	SUMMARY OF MODIFICATIONS	EXECUTED	CHECKED	RELEASED	DATE	VER
500001549213		RETIRADO ATERRAMENTO CFME 500001044565	RICLAV	DALTONR	DALTONR	23.01.2019	03
500000577605		ALT. CONFORME CLAIM 412389063	ANDERSONLB	CAMILAH	CAMILAH	15.02.2012	02

EXECUTED	SCARMAGNANI	THREE PHASE W22 MOTOR - NEMA PREMIUM EFF
CHECKED	DFRANCISCO	FRAME 182T IP55
RELEASED	DFRANCISCO	
REL DT	27.01.2012	WMO JARAGUA DO SUL ENGENHARIA DE PRODUTO

10001592308
000 03
SHEET 1 /

3 HP	04 Poles	60Hz		B
3 HP	02 Poles	60Hz	412372400/0	A

UNCONTROLLED COPY
RELEASED
ZME A3

WEG's property. Forbidden reproduction without previous authorization.