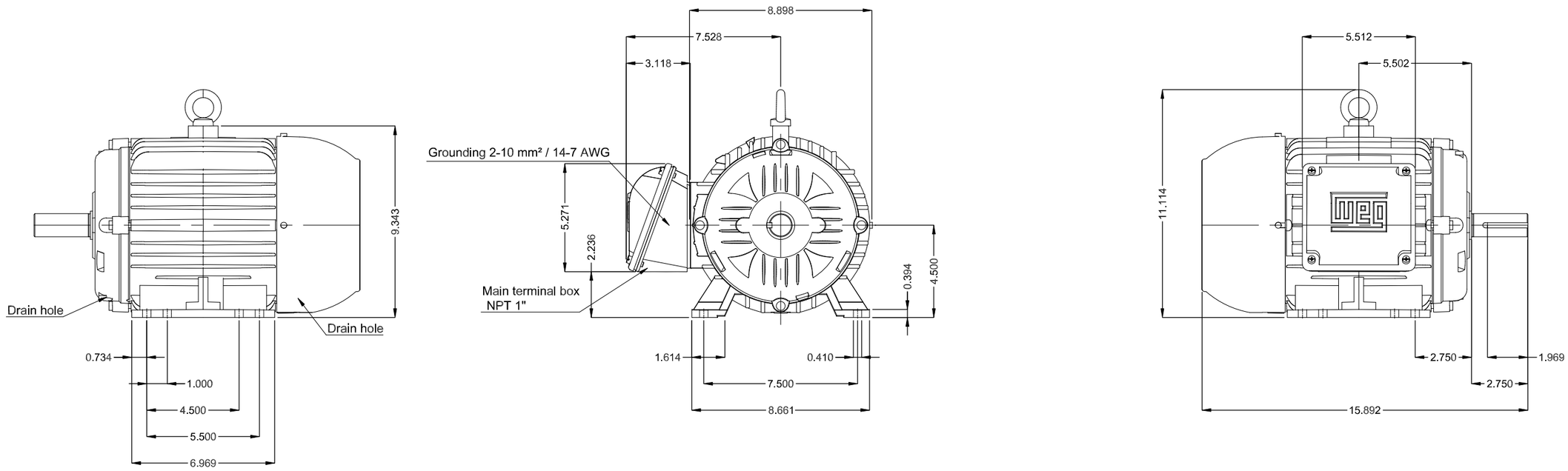

DE Shaft End

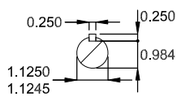

Color RAL 5009

Painting plan 207A

Mounting B3R(D)

1.5 HP 08 Poles 60 Hz | A

ECM	LOC	SUMMARY OF MODIFICATIONS	EXECUTED	CHECKED	RELEASED	DATE	VER
			HYBRISUSER				00

EXECUTED	HYBRISUSER	THREE PH. MOTOR W22 NEMA PREM. EFF.
CHECKED		FRAME 182/4T IP55 TEFC
RELEASED		
REL. DATE		

PREVIEW

WDD 00

SHEET /

Dimensions in inches

A3

WEG's property. Forbidden reproduction without previous authorization.