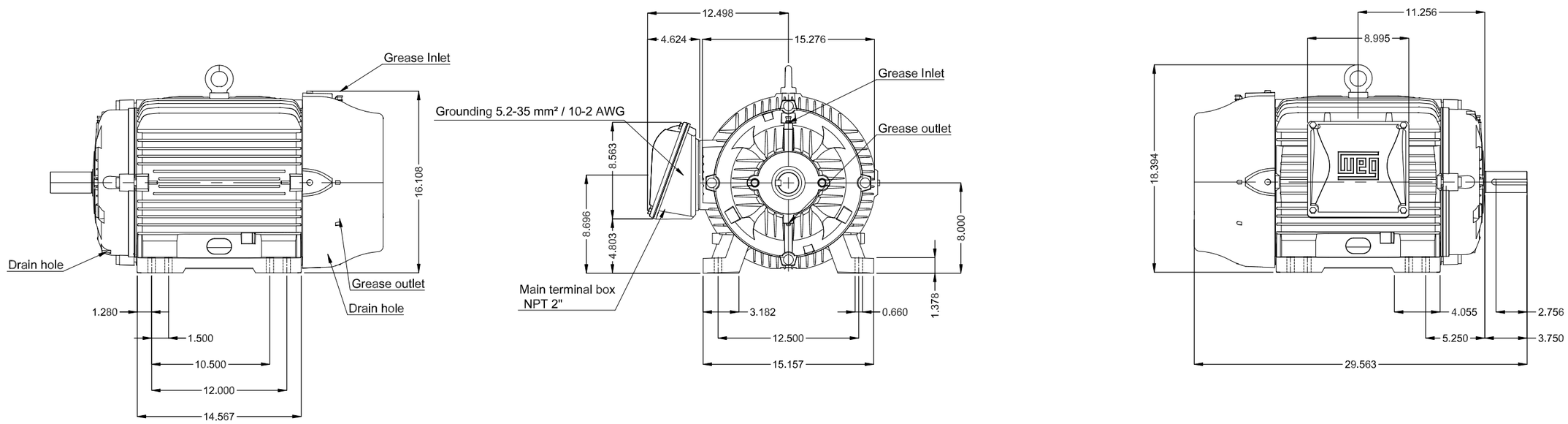


| | |
|---|---|
| Without vertical jackscrews | |
| TS shaft end | |
| Color RAL 5009 | |
| Painting plan 203A | |
| Mounting NEMA F-1 | |
| Mounting B3R(D) | |

DE Shaft End

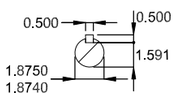


40 HP 04 Poles 60 Hz | A

| ECM | LOC | SUMMARY OF MODIFICATIONS | HYBRISUSER EXECUTED | CHECKED | RELEASED | DATE | VER |
|---|---|---|---|---|---|---|---|
| | | | | | | | 00 |

| | |
|---|---|
| EXECUTED | HYBRISUSER |
| CHECKED | |
| RELEASED | |
| REL. DATE | |

THREE PH. MOTOR W22 NEMA PREM. EFF.
FRAME 324/6TS IP55 TEFC

PREVIEW
WDD 00
SHEET /

Dimensions in inches

A3

WEG's property. Forbidden reproduction without previous authorization.