No reproduction of this drawing is allowed written permission of WEG Motores

| EIXO | | |
|---|---|---|
| PADRÃO | X | Dimensões em polegadas |
| OPCIONAL | | Dimensions in inches |
| ESPECIAL | | |

THIS IS AN UPDATED REVISION, THE PREVIOUS ONE MUST BE DISREGARDED.

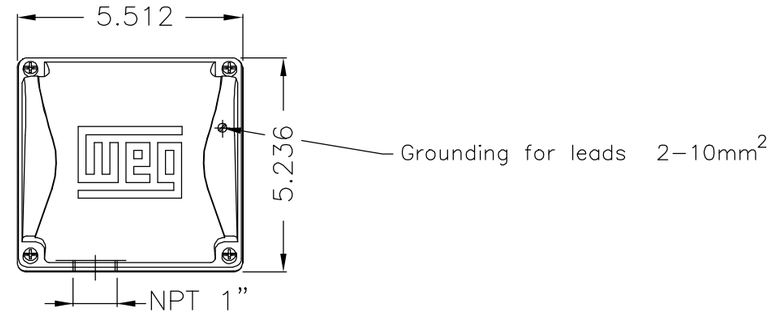


Main terminal box

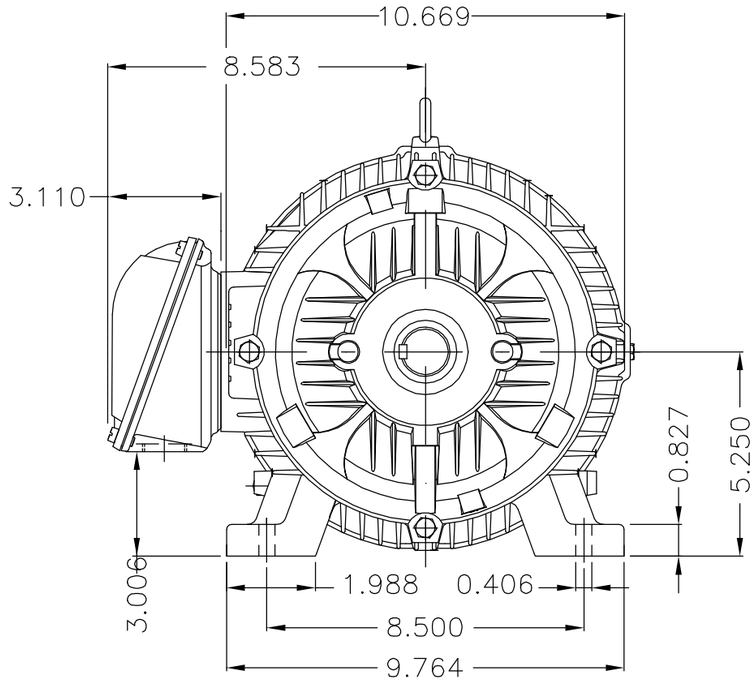


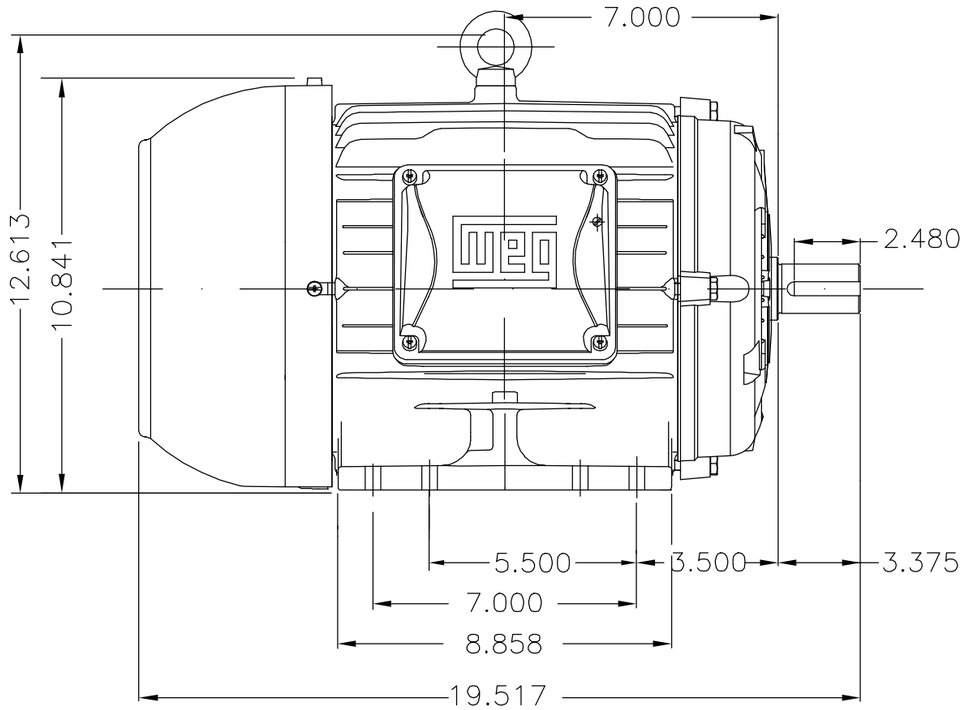


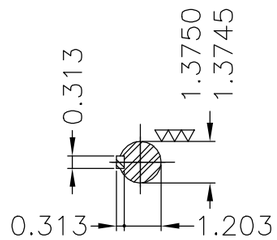


DE Shaft End

Plano de pintura 207A / Painting plan 207A

Forma construtiva B3D / Mounting B3R(D)

WEG ELECTRIC CORPORATION – WEC

| ECM | LOC | SUMMARY OF MODIFICATIONS | EXECUTED | CHECKED | RELEASED | DATE | VER |
|---|---|---|---|---|---|---|---|
| 500002391264 | | UPDATED | SAORIN | DWAGNER | DWAGNER | 05.06.2023 | 02 |
| 500000679975 | | ALT. CONF. ECM 500000679975 | PMAUERBERG | CSPERAFICO | CSPERAFICO | 21.01.2013 | 01 |

| | | | |
|---|---|---|---|
| EXECUTED | SCARMAGNANI | THREE PHASE W22 MOTOR - NEMA PREMIUM EFF | 10001015575 |
| CHECKED | ADEMILSON | FRAME 213/5T IP55 | 000 / 02 |
| RELEASED | ADEMILSON | | |
| REL DT | 26.10.2010 | WMO JARAGUÁ DO SUL ENGENHARIA DE PRODUTO | SHEET 1 / 1 |

15 HP 02 Poles 60Hz 406362900/01 ELET/MEC A

UNCONTROLLED COPY

RELEASED

ZME A3

WEG's property. Forbidden reproduction without previous authorization.