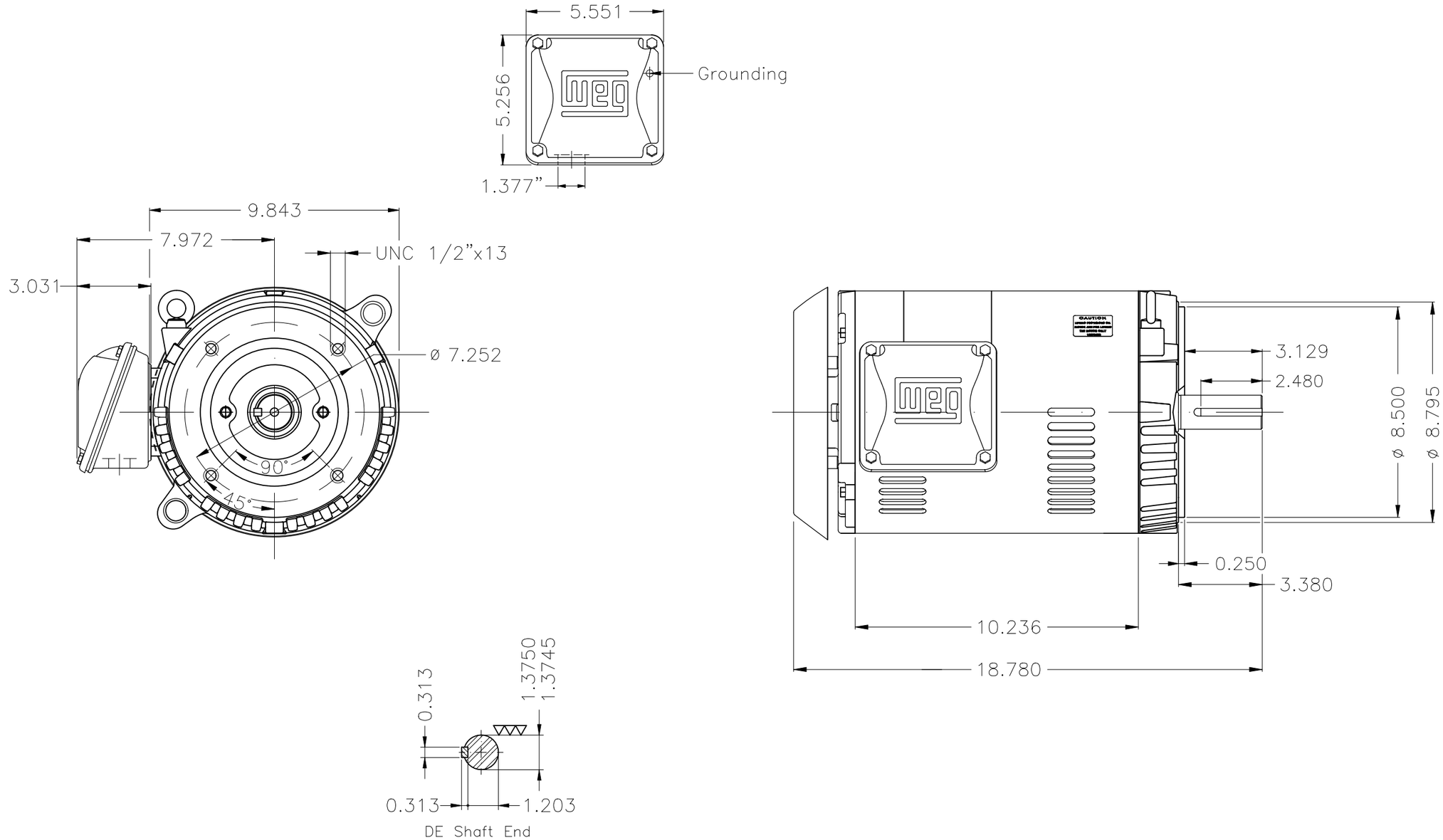

Color Munsell N 1 matte black

Painting plan 207N

Mounting W-6/V18R(D)

ECM	LOC	SUMMARY OF MODIFICATIONS	EXECUTED	CHECKED	RELEASED	DATE	VER
			HYBRISUSER				00

EXECUTED	HYBRISUSER	THREE PH. MOTOR ROLLED STEEL NEMA PREM. EFF.	PREVIEW
CHECKED		FRAME 213/5TC IP21 ODP	WDD 00
RELEASED			
REL. DATE		WMO Jaragua do Sul Product Engineering	SHEET 1 / 1

7.5 HP 04 Poles 60 Hz

A

Dimensions in inches

A3

XME

WEG's property. Forbidden reproduction without previous authorization.