| EIXO/SHAFT | |
|---|---|
| PADRÃO/STANDARD | |
| OPCIONAL/OPTIONAL | |
| ESPECIAL/SPECIAL | X |

Dimensões em polegadas
Dimensions in inches

THIS IS AN UPDATED REVISION, THE PREVIOUS ONE MUST BE DISREGARDED.

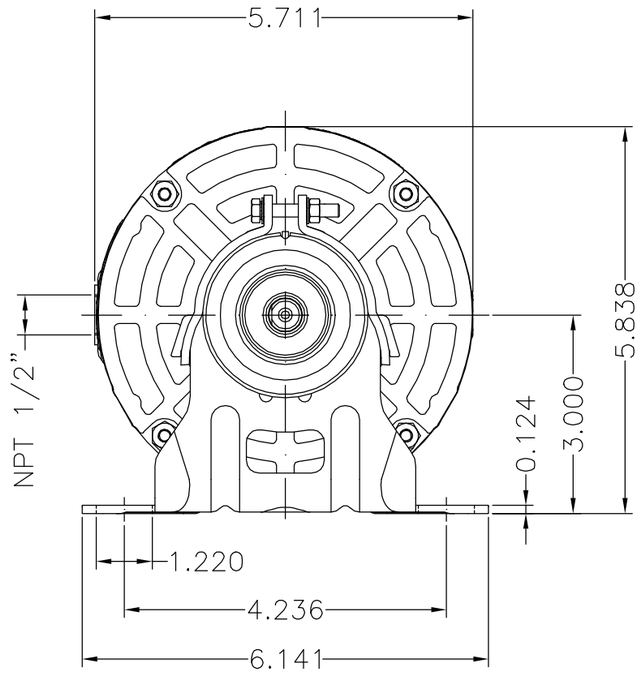


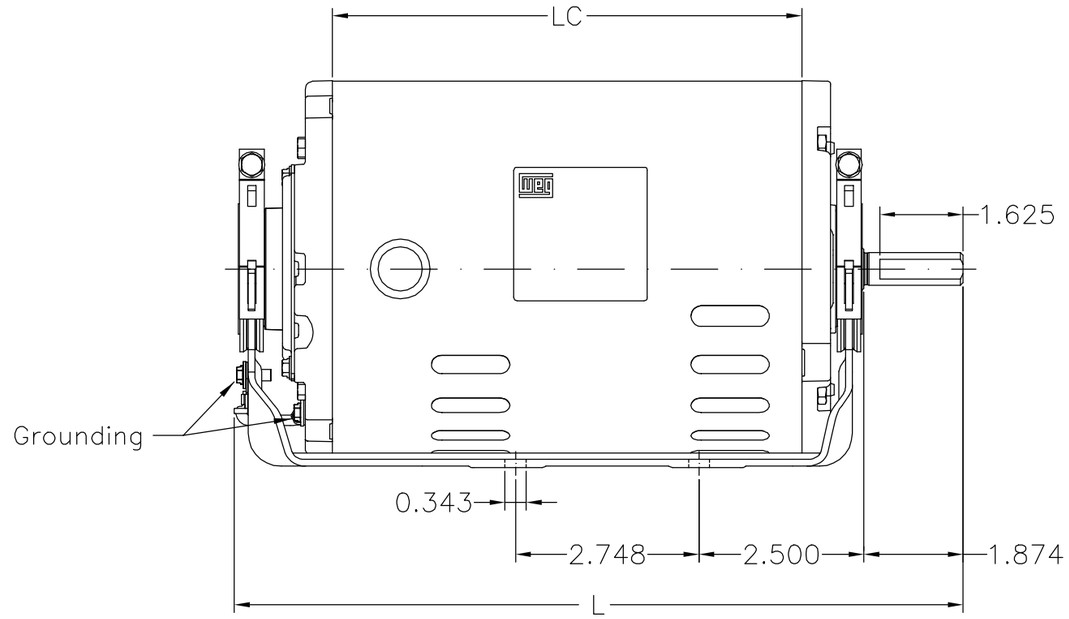


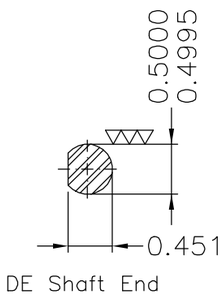


| | | | | LC | L | |
|---|---|---|---|---|---|---|
| 1/2 HP | 04 Poles | 60Hz | 413730044 | 6.693 | 10.925 | G |
| 1/2 HP | 04 Poles | 60Hz | 413729999 | 6.693 | 10.925 | F |
| 1/3 HP | 04 Poles | 60Hz | 413730042 | 5.905 | 10.137 | E |
| 1/3 HP | 04 Poles | 60Hz | 413729998 | 5.905 | 10.137 | D |
| 1/4 HP | 04 Poles | 60Hz | 413730041 | 5.905 | 10.137 | C |
| 1/4 HP | 04 Poles | 60Hz | 413729997 | 5.905 | 10.137 | B |
| 1/6 HP | 04 Poles | 60Hz | 413729929 | 5.905 | 10.137 | A |

Protetor térmico fenólico – automático / Phenolic thermal protector – automatic
Sem pintura / Not painted
Forma construtiva B3D / Mounting F-1/B3R(D)

**WEG ELECTRIC CORP.**

| ECM | LOC | SUMMARY OF MODIFICATIONS | EXECUTED | CHECKED | RELEASED | DATE | VER |
|---|---|---|---|---|---|---|---|
| 500001884523 | | Alterado conforme ZM 415176978 | DEYKSON | SANDRIN | SANDRIN | 08.02.2021 | 10 |
| 500001307299 | | ALTERADO CONFORME ECM | WILLIAMSM | LGAMA | LGAMA | 10.05.2017 | 09 |

| | | |
|---|---|---|
| EXECUTED | PATRICKL | SINGLE PHASE SLIT PHASE ODP ROLLED STEEL FRAME 48Z IP21 |
| CHECKED | JTOGNERI | |
| RELEASED | JTOGNERI | |
| REL DT | 11.02.2015 | WMO LINHARES ENGENHARIA DO PRODUTO |

10003350390
000 10
SHEET 1 / 1

UNCONTROLLED COPY
RELEASED
ZME A3

WEG's property. Forbidden reproduction without previous authorization.