PIN #	COLOR
1	WHITE w/ORANGE
2	WHITE w/GREEN
3	ORANGE
4	GREEN

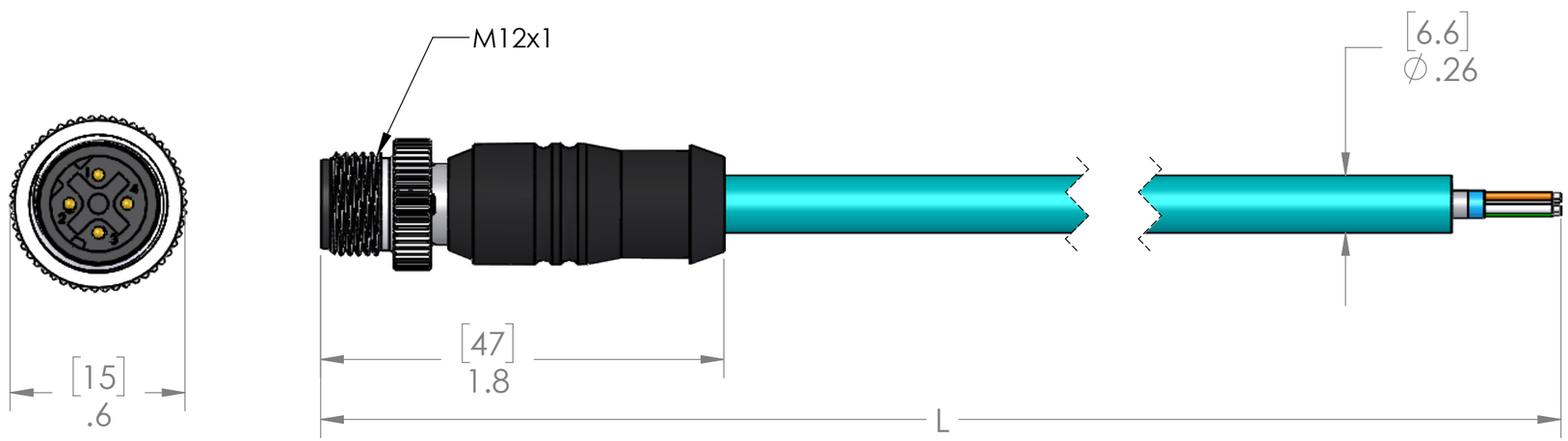

TABLE A		
P/N	L	STD?
MDE45B-4MSP-0.5M	20" [0.5m]	YES
MDE45B-4MSP-1M	40" [1m]	YES
MDE45B-4MSP-2M	79" [2m]	YES
MDE45B-4MSP-3M	118" [3m]	YES
MDE45B-4MSP-4M	157" [4m]	YES
MDE45B-4MSP-5M	197" [5m]	YES
MDE45B-4MSP-6M	236" [6m]	YES
MDE45B-4MSP-8M	315" [8m]	NO
MDE45B-4MSP-10M	393" [10m]	YES
MDE45B-4MSP-12M	472" [12m]	NO
MDE45B-4MSP-15M	590" [15m]	YES
MDE45B-4MSP-20M	786" [20m]	YES
MDE45B-4MSP-25M	983" [25m]	NO

PARTS LISTED AS NOT BEING STANDARD
MAY HAVE MINIMUM ORDER QUANTITIES

MATERIALS:	
BODY:	BLACK PVC
COUPLING:	NICKEL PLATED BRASS
INSERT:	POLYAMIDE
CONTACTS:	GOLD PLATED COPPER ALLOY
CABLE:	2 PR 24 AWG CAT 5e PVC CABLE W/ BRAID & FOIL SHIELDS

CERTIFICATIONS:	
US:	UL LISTED
CANADA:	C-UL LISTED
RoHS:	YES
CE:	YES

PROPRIETARY AND CONFIDENTIAL

THE INFORMATION CONTAINED IN THIS DRAWING IS THE SOLE PROPERTY OF MENCOM CORPORATION. ANY REPRODUCTION IN PART OR AS A WHOLE WITHOUT THE WRITTEN PERMISSION OF MENCOM CORPORATION IS PROHIBITED.

VOLTS	300V
AMPS	4A
TEMP:	80°C

UNLESS OTHERWISE SPECIFIED:

DIMENSIONS ARE IN INCHES AND [MM]

MATERIAL

FINISH

DO NOT SCALE DRAWING

DRAWN BY	GO
DRAWN DATE	05/06/2020
CHECKED BY	JJH
CHECK DATE	05/06/2020

COMMENTS:

MENCOM CORPORATION

TITLE:

4 PL D-CD SHLDD PVC ML CBL

SIZE	DWG. NO.	REV
B	MDE45B-4MSP-ZZ	A

SCALE: 3:2 WEIGHT: SHEET 1 OF 1