# Product data sheet
## Characteristics

# HDL36090T
Circuit breaker, PowerPacT H, thermal magnetic, unit mount, 90A, 3 pole, 14 kA, 600 VAC, interchangable trip unit, 80%



## Main

| | |
|---|---|
| Range of product | PowerPact H |
| Product or component type | Circuit breaker |

## Complementary

| | |
|---|---|
| Line Rated Current | 90 A |
| Number of Poles | 3P |
| Breaking capacity code | D |
| Mounting mode | Unit mount |
| Magnetic hold current | 800 A |
| Magnetic tripping current | 1450 A |
| Electrical connection | Lugs load<br>Lugs line |
| Tightening torque | 44.25 lbf.in (5 N.m) 0.00…0.15 in² (2.5…95 mm²) (AWG 14...AWG 3/0) |
| Height | 6.4 in (162.56 mm) |
| Width | 4.12 in (104.65 mm) |
| Depth | 4.36 in (110.74 mm) |
| Continuous current rating | 80 % |

## Environment

| | |
|---|---|
| Product certifications | CCC<br>UL Listed<br>CSA<br>CE<br>IEC |
| Ambient air temperature for operation | 104 °F (40 °C) |

Disclaimer: This documentation is not intended as a substitute for and is not to be used for determining suitability or reliability of these products for specific user applications

## Ordering and shipping details

| | |
|---|---|
| Category | 01110-HD,JD UNIT MT BREAKER/SWITCH |
| Discount Schedule | DE2 |
| GTIN | 00785901596257 |
| Nbr. of units in pkg. | 1 |
| Package weight(Lbs) | 4.00 lb(US) (1.814 kg) |
| Returnability | Yes |
| Country of origin | US |

## Packing Units

| | |
|---|---|
| Unit Type of Package 1 | PCE |
| Package 1 Height | 5.13 in (13.018 cm) |
| Package 1 width | 7.25 in (18.415 cm) |
| Package 1 Length | 8.44 in (21.433 cm) |

## Offer Sustainability

| | |
|---|---|
| Sustainable offer status | Green Premium product |
| California proposition 65 | WARNING: This product can expose you to chemicals including: DINP, which is known to the State of California to cause cancer, and DIDP, which is known to the State of California to cause birth defects or other reproductive harm. For more information go to www.P65Warnings.ca.gov |
| REACh Regulation | REACh Declaration |
| EU RoHS Directive | Compliant<br>EU RoHS Declaration |
| Mercury free | Yes |
| RoHS exemption information | Yes |
| China RoHS Regulation | China RoHS declaration<br>Product out of China RoHS scope. Substance declaration for your information. |
| Environmental Disclosure | Product Environmental Profile |
| Circularity Profile | End of Life Information |
| PVC free | Yes |

## Contractual warranty

| | |
|---|---|
| Warranty | 18 months |

# HDL36090T

## Dimensions

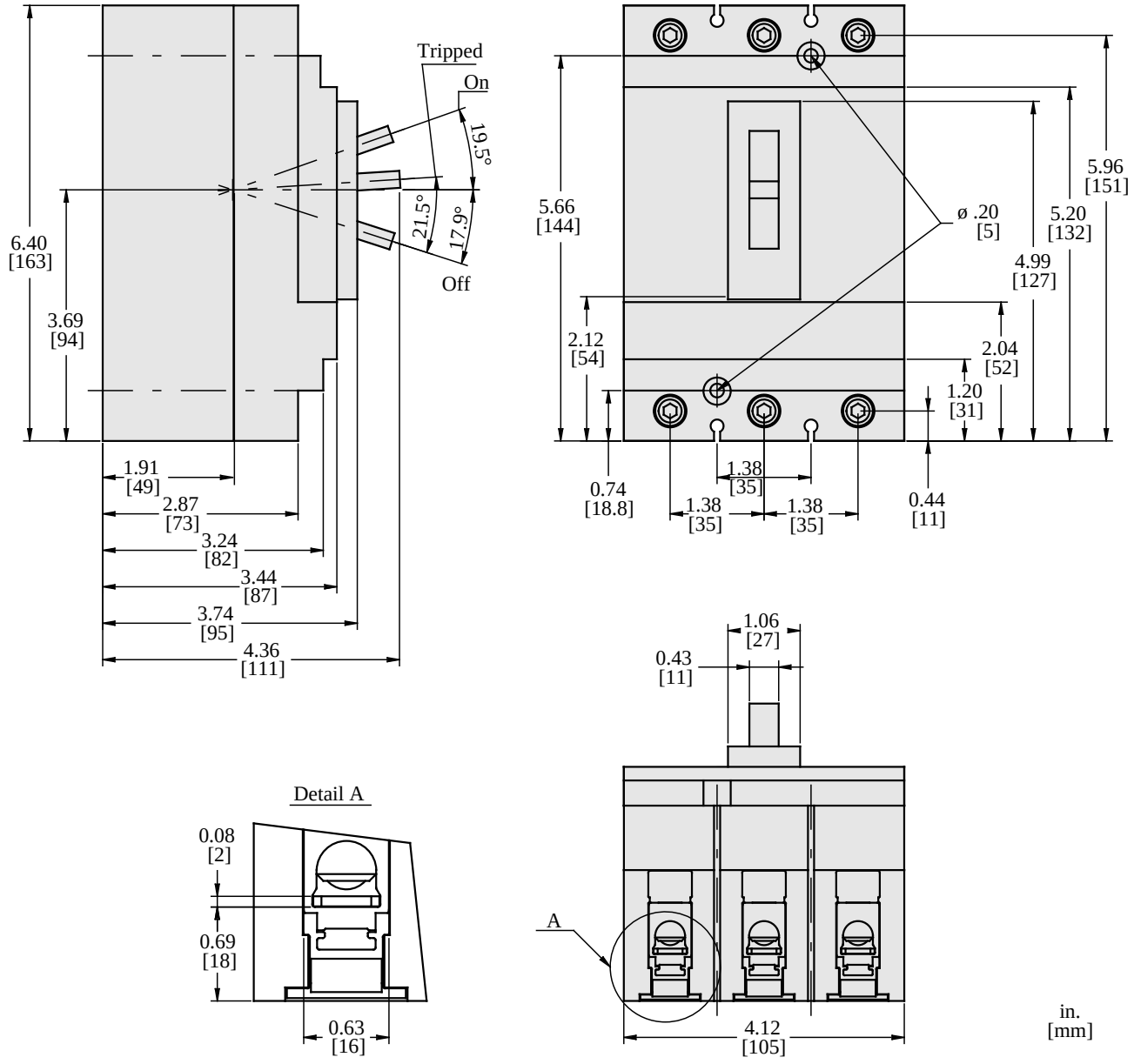


All dimensions are approximate. Also refer to technical drawings and documentation.