Product data sheet
Characteristics

HDL36060CU33X
Circuit breaker, PowerPacT H, Micrologic 3.2S, unit mount, 60A, 3 pole, 14kA, 600 VAC, 100% rated

Price* : 1,641.00 USD



Main

Range of product	PowerPact H
Product or component type	Circuit breaker

Complementary

Line Rated Current	60 A
Number of Poles	3P
Breaking capacity code	D
Mounting mode	Unit mount
Electrical connection	Lugs load Lugs line
Tightening torque	44.25 lbf.in (5 N.m) 0.00…0.15 in² (2.5…95 mm²) (AWG 14...AWG 3/0)
Height	6.4 in (162.56 mm)
Width	4.12 in (104.65 mm)
Depth	4.36 in (110.74 mm)
Continuous current rating	100 %

Environment

Product certifications	CSA IEC UL Listed CE CCC
Ambient air temperature for operation	104 °F (40 °C)

Disclaimer: This documentation is not intended as a substitute for and is not to be used for determining suitability or reliability of these products for specific user applications

* Price is “List Price” and may be subject to a trade discount – check with your local distributor or retailer for actual price.

Ordering and shipping details

Category	01107-H/J ELEC TRIP UNIT MOUNT BREAKER/SW
Discount Schedule	DE2
GTIN	00785901950233
Nbr. of units in pkg.	1
Package weight(Lbs)	5.00 lb(US) (2.268 kg)
Returnability	No
Country of origin	US

Packing Units

Unit Type of Package 1	PCE
Package 1 Height	6.42 in (16.3 cm)
Package 1 width	4.13 in (10.5 cm)
Package 1 Length	4.37 in (11.1 cm)

Offer Sustainability

Sustainable offer status	Green Premium product
California proposition 65	WARNING: This product can expose you to chemicals including: DINP, which is known to the State of California to cause cancer, and DIDP, which is known to the State of California to cause birth defects or other reproductive harm. For more information go to www.P65Warnings.ca.gov
REACh Regulation	REACh Declaration
EU RoHS Directive	Compliant EU RoHS Declaration
Mercury free	Yes
RoHS exemption information	Yes
China RoHS Regulation	China RoHS declaration Product out of China RoHS scope. Substance declaration for your information.
Environmental Disclosure	Product Environmental Profile
Circularity Profile	End of Life Information
PVC free	Yes

Contractual warranty

Warranty	18 months

HDL36060CU33X

Dimensions

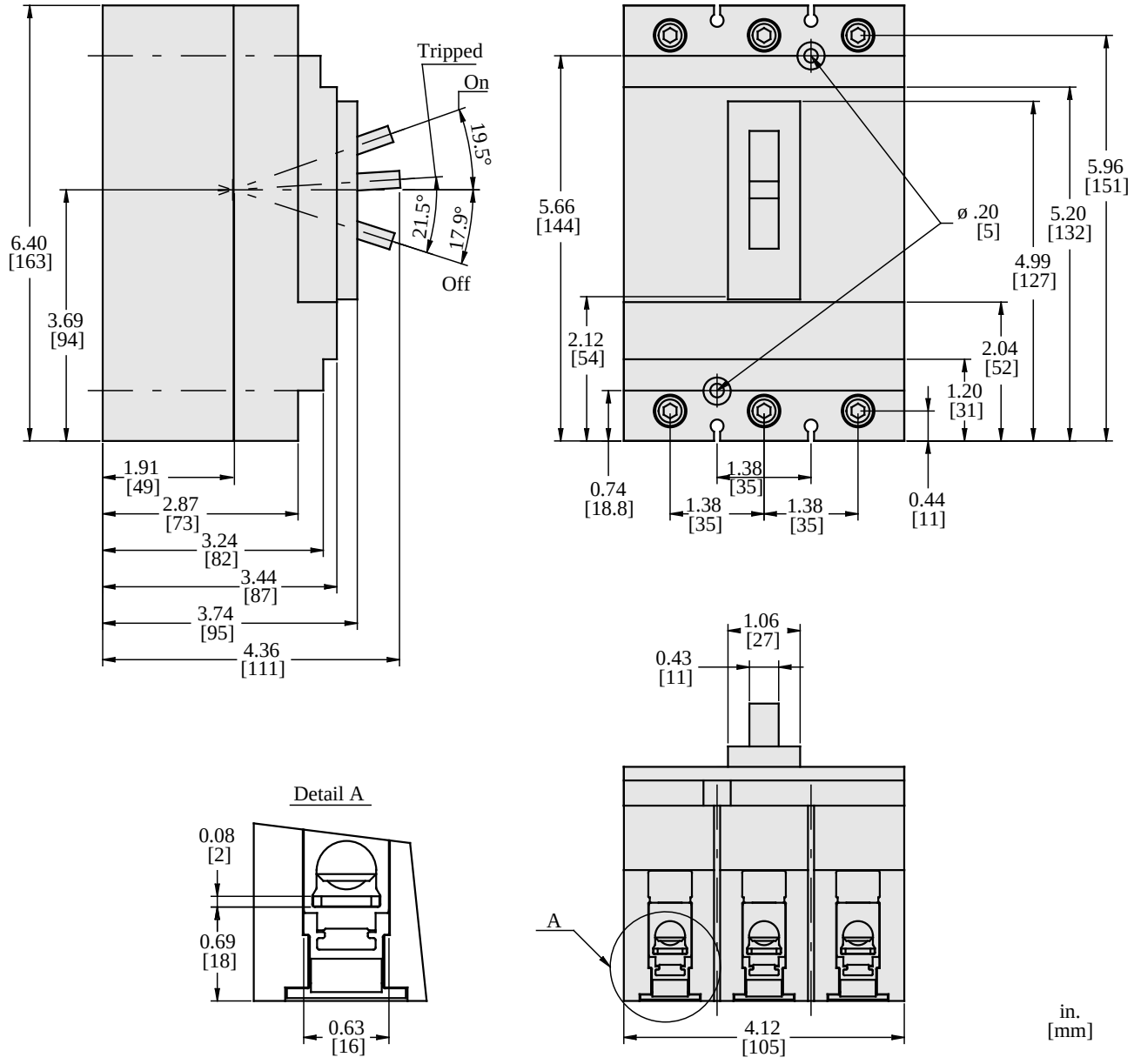

All dimensions are approximate. Also refer to technical drawings and documentation.