interface modul

TURCK
Your Global Automation Partner

Level controller
1-channel
MK 91-121-R/024VDC

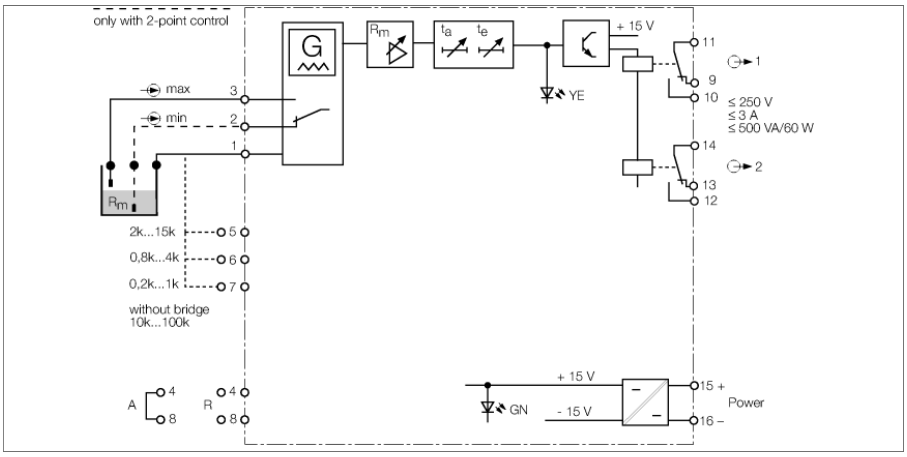

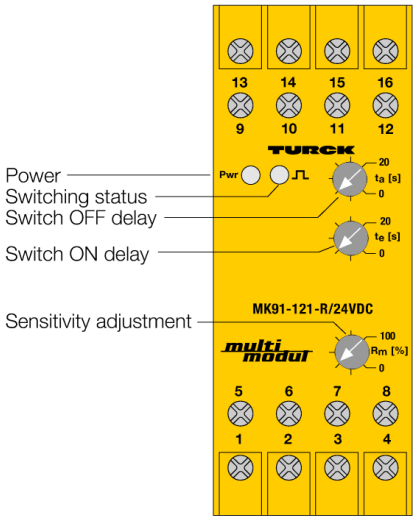

The 1-channel level controller MK91-121-R/24VDC monitors and regulates conductive liquid levels. As a dual level regulator, it can be used to control pumps amd solenoid valves, as monitoring device it is designed for run-dry or over flow protection

The level controller not only provides optimum reliability in differentiating liquids, it is also suited for the distinction between foam and liquid .

The responsivity (liquid resistance) is adjustable between 0.2 … 100 kΩ. One of the four sensitivity ranges is selected by bridging the input terminals. Then you can finetune the switchpoint via the potentiometer at the front.

The possibility of setting the switch-on and switch-off delay separately is very important when dealing with turbulent liquid levels. You can set a delay time between 0 … 20 s via the potentiometers at the front.

Two relay outputs each with one changeover contact are available to output the switching commands. The output configuration of both outputs can be changed from NC mode R (no bridge between terminals 4/8) to NO mode A (bridge between terminals 4/8).

The switching status of the output is indicated by a yellow LED and operational readiness by a green LED.

- **Responsivity: 0.2…100 kΩ**
- **Hysteresis: 10%**
- **Output: 2 relays with 1 changeover contact**
- **Electronic switching of electrodes**
- **Switch-on/off delay 0…20 s, separately adjustable**
- **Reliable distinction between foam and liquid**
- **Galvanic isolation of input circuits, output circuits and power supply**

Edition • 2020-01-31T12:19:05+01:00

 Hans Turck GmbH & Co.KG • D-45472 Mülheim an der Ruhr • Witzlebenstraße 7 • Tel. 0208 4952-0 • Fax 0208 4952-264 • more@turck.com • www.turck.com

Level controller
1-channel
MK 91-121-R/024VDC

Type designation	MK 91-121-R/024VDC
Ident-No.	7545087
Nominal voltage	24 VDC
Operating voltage range	20…28 VDC
Power consumption	≤ 1.5 W
Input circuits	2 electrodes or alternatively 3 electrodes
Schaltpunkt	0,2-100 kΩ
Probe voltage	0,02...5 Vpp/150 Hz (triangle)
Schaltschwelle	0,2...1 kΩ
Schaltschwelle	0,8...4 kΩ
Schaltschwelle	2,5...15 kΩ
Schaltschwelle	10...100 kΩ
Einschaltverzögerung	0...20 s
Ausschaltverzögerung	0...20 s
Hysterese	10%
Output circuits (digital)	2 x relays (change-over)
Output switching voltage relay	≤ 30 VDC / ≤ 250 VAC
Switching current per output	≤ 3 A
Switching capacity per output	≤ 500 VA/60 W
Switching frequency	≤ 5 Hz
Contact quality	AgNi, 3µ Au
Galvanic isolation	
Test voltage	2.5 kV
Indication	
Operational readiness	green
Switching state	Yellow
Protection class	IP20
Ambient temperature	-25…+60 °C
Storage temperature	-40…+80 °C
Dimensions	89 x 36 x 70 mm
Weight	160 g
Mounting instructions	DIN rail (NS35) or panel
Housing material	Polycarbonate/ABS
Electrical connection	4 × 4-pin flat terminals with self-lifting pressure plates
Terminal cross-section	1 x 2.5 mm^2 / 2 x 1.5 mm^2

Dimensions

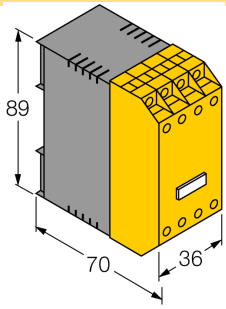

Edition • 2020-01-31T12:19:05+01:00

Hans Turck GmbH & Co.KG • D-45472 Mülheim an der Ruhr • Witzlebenstraße 7 • Tel. 0208 4952-0 • Fax 0208 4952-264 • more@turck.com • www.turck.com