| SPECIFICATIONS | |
|---|---|
| CAP MATERIAL/FINISH | BRASS/NICKEL |
| GASKET/O-RING MATERIAL | NITRILE |

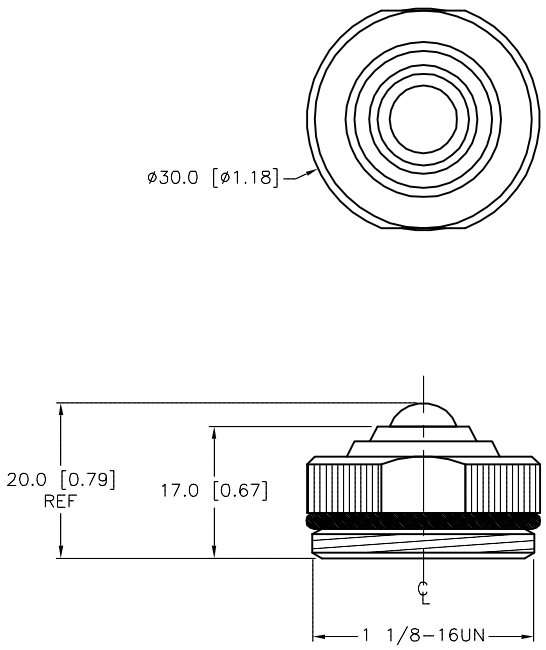


**SOURCE DRAWING - FOR REFERENCE ONLY**

| RELATED DOCUMENTS | 3RD ANGLE PROJECTION | THIS DRAWING IS CONFIDENTIAL AND THE PROPERTY OF TURCK INC. USE OF THIS DOCUMENT WITHOUT WRITTEN PERMISSION IS PROHIBITED. | TURCK | 3000 CAMPUS DRIVE MINNEAPOLIS, MN 55441 1-800-544-7769 (763) 553-7300 (763) 553-0708 fax www.turck.us |
|---|---|---|---|---|
| 1. 2. 3. 4. | | | | |
| MATERIAL: SEE SPECIFICATIONS | ALL DIMENSIONS DISPLAYED ON THIS DRAWING ARE FOR REFERENCE ONLY | DRFT: RWC / DATE: 01/20/06 | DESCRIPTION: RSFC-MC | |
| | | APVD: / SCALE: 1=1.0 | | |
| FINISH: SEE SPECIFICATIONS | CONTACT TURCK FOR MORE INFORMATION | UNIT OF MEASUREMENT: **MILLIMETER [ INCH ]** | IDENTIFICATION NO.: U2-03885 | REV: B |
| | | DO NOT SCALE THIS DRAWING | FILE: U2-03885 | SHEET 1 OF 1 |

| REV | DESCRIPTION | BY | DATE | ECO NO. |
|---|---|---|---|---|
| B | ADD KNURLING, CHANGE CAP TO HAVE TWO FLATS, NOT THREE | RCE | 10/18/11 | 36728 |