DRAWING NO. SE209241

REV	DATE	DESCRIPTION	ECO	BY	C'H'K.
B	11/09/2011 00:00:00 AM	TOOLING DETAILS UPDATED AS PER MARKUP --	25811	DK	MA

10 CATALOG NUMBER	STRANDED COPPER CONDUCTOR ACCOMMODATED			BOLT SIZE	METRIC BOLT SIZE	FIG. NO.	DIMENSIONS								
	CODE (AWG)	NAVY	METRIC SIZE (CLASS 2)				B	C	H REF.	K DIA.	L	N	O.D.	T REF.	Z MIN.
YA4545	1250 kcmil	-----	-----	3/4	-----	1	3.19 [81]	2.46 [62]	4.43 [113]	.81 [21]	5.52 [140]	.75 [19]	1.69 [43]	.38 [10]	.77 [20]
YA4590						2			5.10 [130]	.81 [21]	2.62 [67]	.75 [19]			.77 [20]
YA45N45				1/2	M12	1			4.43 [113]	.56 [14]	5.27 [134]	.63 [16]			.64 [16]
YA45N90						2	3.19 [81]	2.46 [62]	5.10 [130]	.56 [14]	2.37 [60]	.63 [16]	1.69 [43]	.38 [10]	.64 [16]

CONNECTOR SIZE	TOLERANCES					
	B	C	K DIA.	L	N	O.D.
-8C THRU -25	±.06	±.04	±.02	±.09	±.03	±.01
-26 THRU -34	±.08	±.04	±.02	±.12	±.03	±.01
-35 AND UP	±.09	±.06	±.02	±.15	±.06	±.01

TOLERANCE BLOCK

INSTALLATION TOOLING (# CRIMPS)

CATALOG NO.	DIE INFORMATION			MECHANICAL RATCHET				HYDRAULIC							DIELESS (# CRIMPS)	WIRE STRIP LENGTH
	COLOR CODE	DIE INDEX	TYPE	5 Y1MRTC	OUR840	MD6 MD7	MD6--R2 MD7-34R	PATMD6 PAT600	7 Y34A Y34B Y34BH	Y35, Y39 Y750, BAT35 PAT750	4 Y46 PAT46	3 Y45	Y48B	Y60BHU		
YA4545 YA4590 YA45N45 YA45N90	YELLOW	29	YELLOW DIE SET	-----	-----	-----	-----	-----	-----	-----	P45RT(6)	S45RT(6)	C45R(3)	L45RT(3)	-----	3-1/4"
			NEST INDENTOR	-----	-----	-----	-----	-----	-----	-----	P45D(3) P44PR	-----	C45D(3) Y48PR	-----		

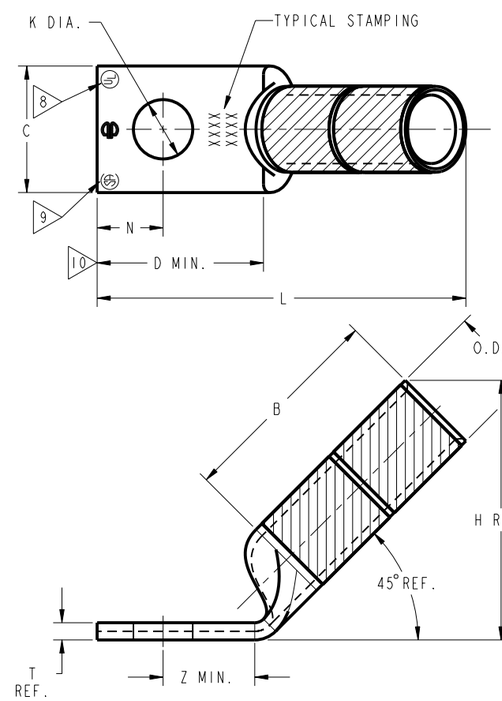

FIG. 1

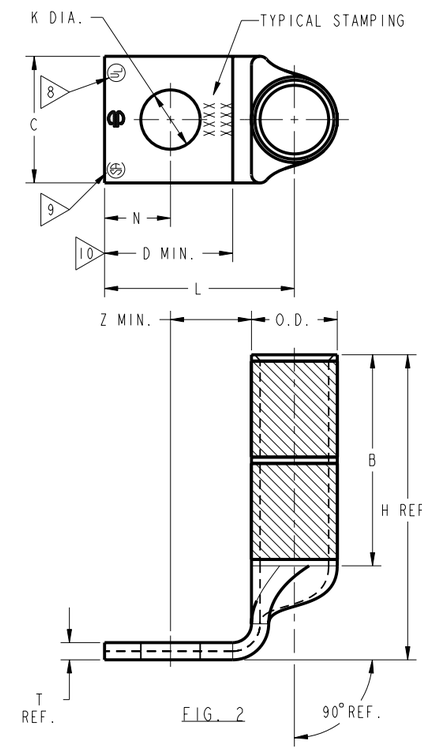

FIG. 2

REFERENCE: SD79849

NOTES:

1. MATERIAL : COPPER TUBING.
2. FINISH: ELECTRO-TIN PLATED.
3. CATALOG # PT6515 ADAPTOR IS REQUIRED TO USE "U" DIES IN Y45 SERIES TOOLS.
4. CATALOG # PUADP-1 ADAPTOR IS REQUIRED TO USE "U" DIES IN Y46 SERIES TOOLS.
5. PERMANENT DIE IN TOOLING.
6. DIMENSIONS IN BRACKETS [] ARE IN MILLIMETERS ROUNDED OFF TO THE NEAREST MILLIMETER, UNLESS OTHERWISE NOTED, AND ARE FOR REFERENCE ONLY.
7. FOR USE BY CUSTOMERS THAT HAVE THIS HYPRESS™. NO NEW Y34A HYPRESSES™ ARE BEING PROCESSED. Y34A USES A--D NEST DIES ONLY.
8. CONNECTORS ARE UL LISTED; UNDRILLED VERSIONS ARE NOT UL LISTED.
9. CONNECTORS ARE CSA CERTIFIED; UNDRILLED VERSIONS ARE NOT CSA CERTIFIED.
10. FOR UNDRILLED VERSIONS ADD SUFFIX "-U" TO END OF CATALOG NUMBER. FOR UNDRILLED VERSIONS, USE D MIN. = N MAX. + Z MIN.
11. "X", "W-RT", "W-VT", "U", & "L" DIE SETS ARE COLOR CODED. "A", "B", AND "C" DIES ARE NOT COLOR CODED. NESTS AND INDENTOR TYPE ARE NOT COLOR CODED.

TO ORDER BURNDY® PRODUCTS CALL

UNITED STATES
1-800-346-4175 (LONDONDERRY, NH)

CANADA:
1-800-361-6975 (QUEBEC)
1-800-387-6487 (ALL OTHER PROVINCES)

FOR PRODUCT INFO: http://www.burndy.com

COPPER HYLUG™

ITEM NO:	N/A		
CAT. NO:	YA-45,-90 / YA-N-45,-90		
DRAWN BY:	J.MICHAUD	1/17/95	
CHECKER:	D.FILLION	1/17/95	
DSN APPVL:	C.PALAGI	1/18/95	
MFG APPVL:	N/A	--	
QA APPVL:	C.ACKERMAN	2/03/95	
MKT APPVL:	T.NELSON	1/20/95	SCALE: NTS
PROD FAM:	CM&R COMPRESSION		DRAWING NO / REV
PROJECT #:	--	SIZE	SE209241 / B
DOCUMENT TYPE:	Sales	D	
REL LEVEL:	Released		SHEET 29 OF 32

REV: PE0200