REV	DATE	DESCRIPTION	ECO	BY	C'H'K.
B	08/17/2015	ROLLMARKING UPDATION	41291	NG	RG

CONDUCTOR ACCOMMODATED		BOLT SIZE [METRIC]	COLOR CODE	DIE INFORMATION		BURNDY® INSTALLATION TOOLING											DIELESS (# OF CRIMPS)	WIRE STRIP LENGTH
						MECHANICAL (# OF CRIMPS)				HYDRAULIC (# OF CRIMPS)								
ALUMINUM	COPPER			DIE INDEX	TYPE	Y1MRTC	OUR840	MD6 MD7	MD6-R2 MD7-34R	Y500CT PAT600 PATMD6	Y34A Y34B Y34BH (9, 10)	Y35, Y39 Y750 PAT750 (9)	Y46 PAT46 (8, 9)	Y45 (7, 9)	Y48BH	Y60BH		
250 Kcmil CLASS B CONCENTRIC COMPRESSED COMPACT SIW	250 Kcmil CLASS B , C CONCENTRIC COMPRESSED COMPACT	3/8 [M10]	RED	324	RED DIE SET	--	--	--	--	--	A29AR (2)	U29ART (2)	U29ART (2)	U29ART (2)	C29AR (1)	L29ART (1)	HYDRAULIC: Y644M (1) PAT644M (1)	1-9/16"
					NEST INDENTOR	--	--	--	--	--	A32D (1) B32D (1) Y34PR-5	--	P32D (1) P34PR-5	--	--	--		

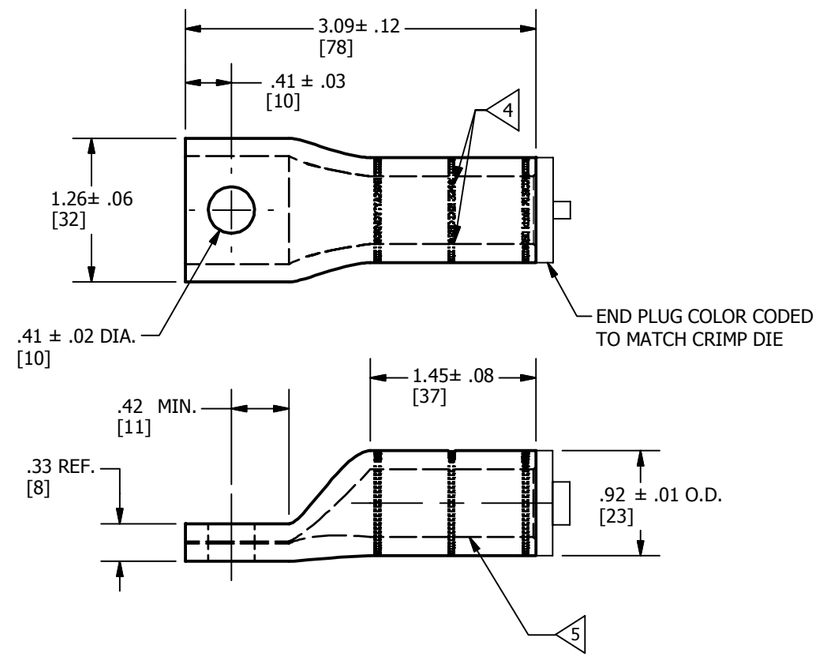

BARREL MARKING

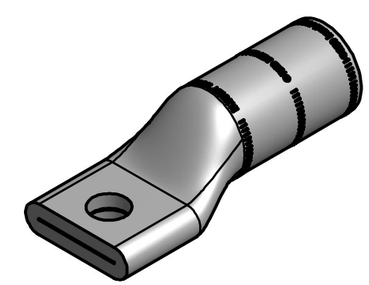

NOTES:

1. MATERIAL : ALUMINUM.
2. HYLUG™ ACCOMMODATE U.S. STANDARD WASHERS.
3. REMOVE ALL EXCESS PENETROX™ FROM CONNECTOR AND ADJACENT CONDUCTOR PRIOR TO TAPING.
4. UL LISTED AND CSA CERTIFIED WIRE CONNECTORS. RATED 90 C (AL9CU). FOR USE WITH COPPER AND ALUMINUM CONDUCTOR.
5. CONNECTOR BARRELS PREFILLED WITH PENETROX™.
6. DIMENSIONS IN BRACKETS [ ] ARE IN MILLIMETERS ROUNDED OFF TO THE NEAREST MILLIMETER, UNLESS OTHERWISE SPECIFIED AND ARE FOR REFERENCE ONLY.
7. CATALOG # PT6515 ADAPTOR IS REQUIRED TO USE "U" DIES IN Y45 SERIES TOOLS.
8. CATALOG # PUADP-1 ASAPTOR IS REQUIRED TO USE IN Y46 SERIES TOOLS.
9. Y35P3 INDENTOR ADAPTOR REQUIRED FOR "Y34PR" TYPE INDENTORS.
10. FOR USE BY CUSTOMERS THAT HAVE THIS HYPRESS™. NO NEW HYPRESSES™ ARE BEING PROCESSED.

TO ORDER BURNDY® PRODUCTS CALL

UNITED STATES
1-800-346-4175 (LONDONDERRY, NH)

CANADA:
1-800-361-6975 (QUEBEC)
1-800-387-6487 (ALL OTHER PROVINCES)

FOR PRODUCT INFO: http://www.burndy.com

HYLUG™

ITEM NO: 50026877

CAT. NO: YA29A9

DRAWN BY: PALANI.M	06/13/2013	
CHECKER: --		
DSN APRVL: MICHAUD J	06/27/2013	
MFG APRVL: KNAPTON M	07/03/2013	
QA APRVL: WATTS T	06/28/2013	
MKT APRVL: CAVANAUGH R	06/28/2013	
PROD FAM: --		
PROJECT #: --		
DOCUMENT TYPE: SALES		
REL LEVEL: Released		

BURNDY

SIZE	DRAWING NO	REV
B	50026878	B
	SHEET 1 OF 1	