MALE END VIEW

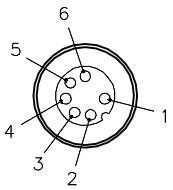

BOARD LAYOUT

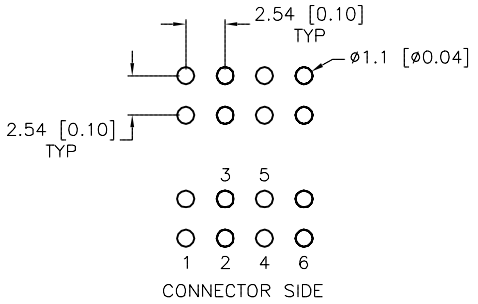

TYPICAL PANEL CUTOUT

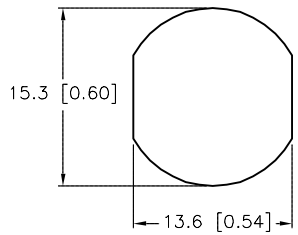

SPECIFICATIONS

CONTACT CARRIER MATERIAL/COLOR	PA 6 NYLON/BLACK
CONTACT MATERIAL/PLATING	BRASS/GOLD
HOUSING MATERIAL/PLATING	BRASS/NICKEL
LOCKNUT MATERIAL/PLATING	BRASS/NICKEL
RATED CURRENT [A]	2.0 A
RATED VOLTAGE [V]	60 VAC/75 VDC
TERMINAL PIN MATERIAL/PLATING	PHOSPHOR BRONZE/GOLD
TEMPERATURE RATING	−40°C to +90°C (−40°F to +194°F)
PROTECTION CLASS	MEETS NEMA 1,3,4,6,13 AND IEC IP67
MAX. PANEL THICKNESS	3.0 [0.12]

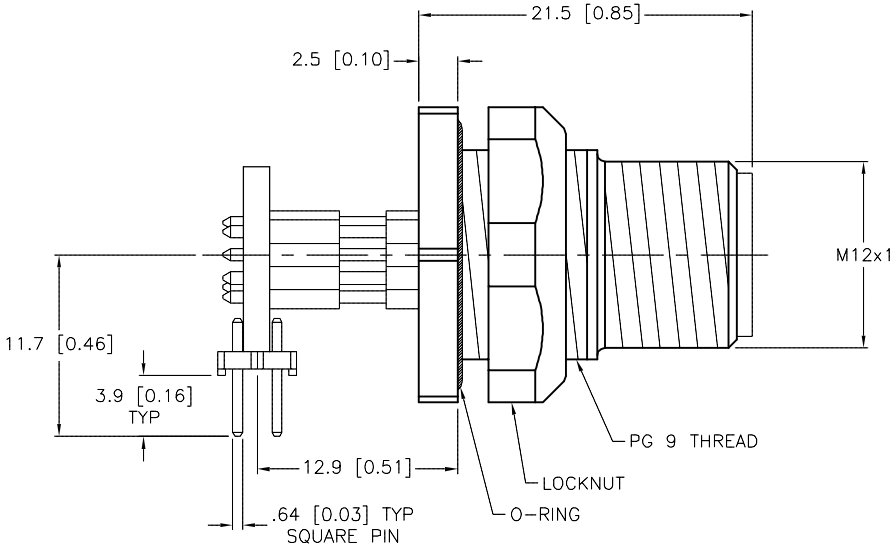

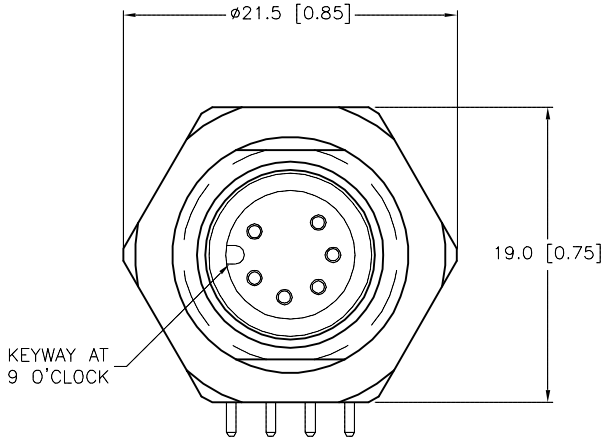

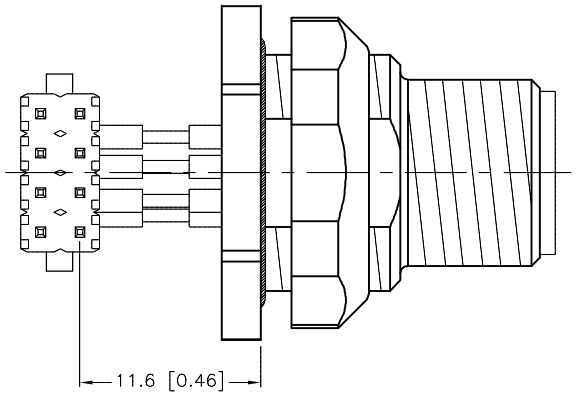

SOURCE DRAWING - FOR REFERENCE ONLY

REV	DESCRIPTION	BY	DATE	ECO NO.
A	DRAWING RELEASE	TH	08/15/06	

RELATED DOCUMENTS
1.
2.
3.
4.

3RD ANGLE PROJECTION

THIS DRAWING IS CONFIDENTIAL AND THE PROPERTY OF TURCK INC. USE OF THIS DOCUMENT WITHOUT WRITTEN PERMISSION IS PROHIBITED.

TURCK INC
High Technology Sensors and Automation Controls
3000 CAMPUS DRIVE
MINNEAPOLIS, MN 55441
1-800-544-7769
(763) 553-7300
(763) 553-0708 fax
turck.com

MATERIAL: SEE SPECIFICATIONS

FINISH: SEE SPECIFICATIONS

ALL DIMENSIONS DISPLAYED ON THIS DRAWING ARE FOR REFERENCE ONLY

CONTACT TURCK FOR MORE INFORMATION

DRFT: RWC | DATE: 04/11/06

DSGN: | SCALE: 1=.5

UNIT OF MEASUREMENT
MILLIMETER [INCH]
DO NOT SCALE THIS DRAWING

DESCRIPTION: WFSD 6-PCBH

IDENTIFICATION NO.: U2-07367 | REV: A

FILE: U2-07367 | SHEET 1 OF 1