MALE END VIEW

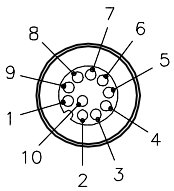

BOARD LAYOUT

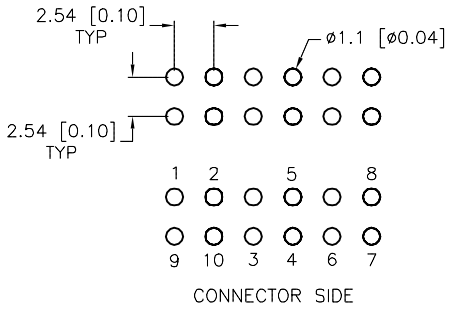

TYPICAL PANEL CUTOUT

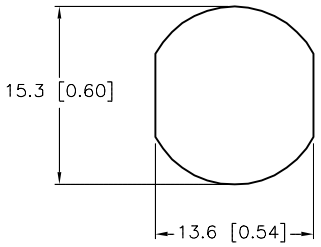

SPECIFICATIONS

CONTACT CARRIER MATERIAL/COLOR	PA 6 NYLON/BLACK
CONTACT MATERIAL/PLATING	BRASS/GOLD
HOUSING MATERIAL/PLATING	BRASS/NICKEL
LOCKNUT MATERIAL/PLATING	BRASS/NICKEL
RATED CURRENT [A]	2.0 A
RATED VOLTAGE [V]	60 VAC/75 VDC
TERMINAL PIN MATERIAL/PLATING	PHOSPHOR BRONZE/GOLD
TEMPERATURE RATING	−40°C to +90°C (−40°F to +194°F)
PROTECTION CLASS	MEETS NEMA 1,3,4,6,13 AND IEC IP67
MAX PANEL THICKNESS	3.0 [0.12]

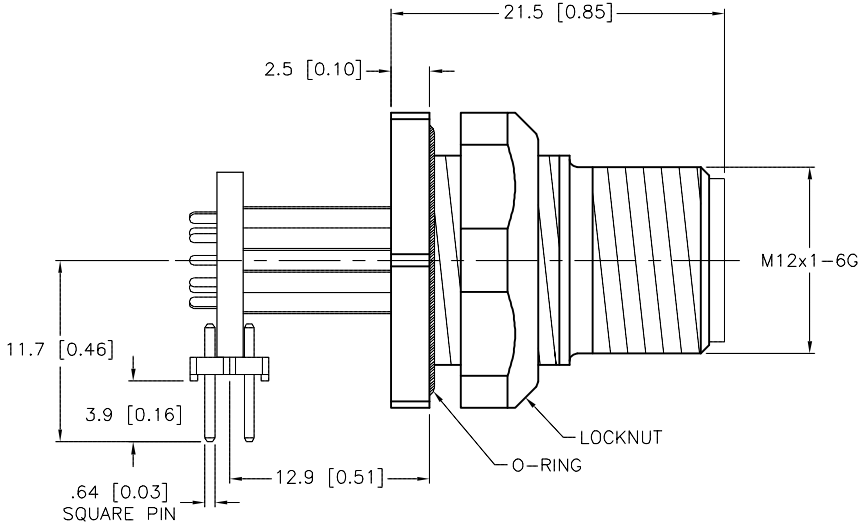

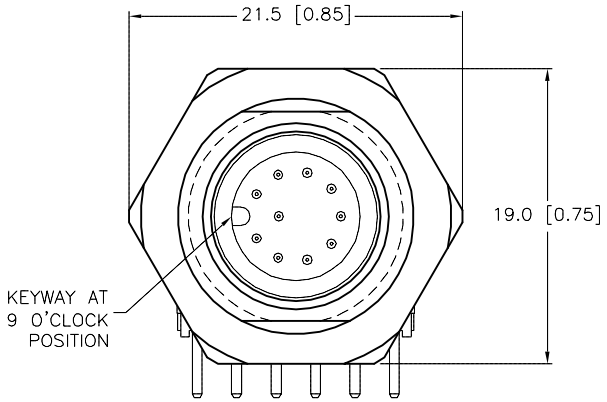

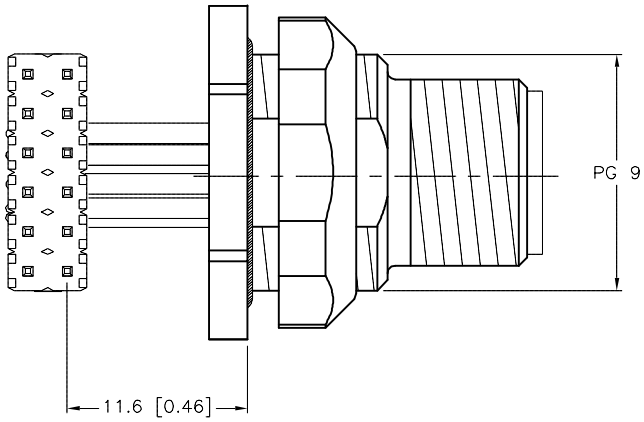

SOURCE DRAWING - FOR REFERENCE ONLY

RELATED DOCUMENTS	3RD ANGLE PROJECTION	THIS DRAWING IS CONFIDENTIAL AND THE PROPERTY OF TURCK INC. USE OF THIS DOCUMENT WITHOUT WRITTEN PERMISSION IS PROHIBITED.	TURCK INC High Technology Sensors and Automation Controls	3000 CAMPUS DRIVE MINNEAPOLIS, MN 55441 1−800−544−7769 (763) 553−7300 (763) 553−0708 fax turck.com
1. 2. 3. 4.				
MATERIAL: SEE SPECIFICATIONS	ALL DIMENSIONS DISPLAYED ON THIS DRAWING ARE FOR REFERENCE ONLY	DRFT: RWC	DATE: 04/11/06	DESCRIPTION: WFSD 10−PCBH
		DSGN:	SCALE: 1=.5	
FINISH: SEE SPECIFICATIONS	CONTACT TURCK FOR MORE INFORMATION	UNIT OF MEASUREMENT: **MILLIMETER [INCH]**		IDENTIFICATION NO.: U2−07369 — REV: A
		DO NOT SCALE THIS DRAWING		FILE: U2−07369 — SHEET 1 OF 1

REV	DESCRIPTION	BY	DATE	ECO NO.
A	DRAWING RELEASE	TH	08/15/06	