Product data sheet
Characteristics

9070T1000D3

Transformer, Type T, industrial control, 1000 VA, 208 VAC primary / 120 VAC secondary, 1 phase, 50/60 Hz, 115 °C rise

Product availability : Stock - Normally stocked in distribution facility

Price* : 837.00 USD

Main

Product Type	Industrial Control Transformer
Power Rating	1000 VA
Type	T

Complementary

Number of Phases	1 phase
Power Rating	1000 VA UL 1000 VA CSA 1000 VA NOM 630 VA
Temperature Rise	115 °C
Electrical Connection	Screw clamp terminals
Height	4.51 in (114.55 mm)
Width	5.25 in (133.35 mm)
Depth	6.3 in (160.02 mm)
Material	Copper winding
Fingersafe Cover Compatibility	FSC2

Environment

Certifications	CSA file LR37055 guide 184-N-90 UL listed file E61239
Enclosure Type	Not rated (open device)
Insulation Temperature	356 °F (180 °C)

* Price is “List Price” and may be subject to a trade discount – check with your local distributor or retailer for actual price.

Disclaimer: This documentation is not intended as a substitute for and is not to be used for determining suitability or reliability of these products for specific user applications

Ordering and shipping details

Category	16201 - 9070 T (NOT TF) 250-2000VA
Discount Schedule	CP8
GTIN	00785901905882
Nbr. of units in pkg.	1
Package weight(Lbs)	21.68 lb(US) (9.834 kg)
Returnability	Yes
Country of origin	MX

Packing Units

Unit Type of Package 1	PCE
Package 1 Height	7.00 in (17.78 cm)
Package 1 width	8.20 in (20.828 cm)
Package 1 Length	8.50 in (21.59 cm)

Offer Sustainability

Sustainable offer status	Green Premium product
California proposition 65	WARNING: This product can expose you to chemicals including: Phenyl glycidyl ether, which is known to the State of California to cause cancer and birth defects or other reproductive harm. For more information go to www.P65Warnings.ca.gov
REACh Regulation	REACh Declaration
EU RoHS Directive	Compliant EU RoHS Declaration
Mercury free	Yes
RoHS exemption information	Yes
China RoHS Regulation	China RoHS declaration Product out of China RoHS scope. Substance declaration for your information.
Environmental Disclosure	Product Environmental Profile
PVC free	Yes

Contractual warranty

Warranty	10 Years

9070T1000D3

Approximate Dimensions

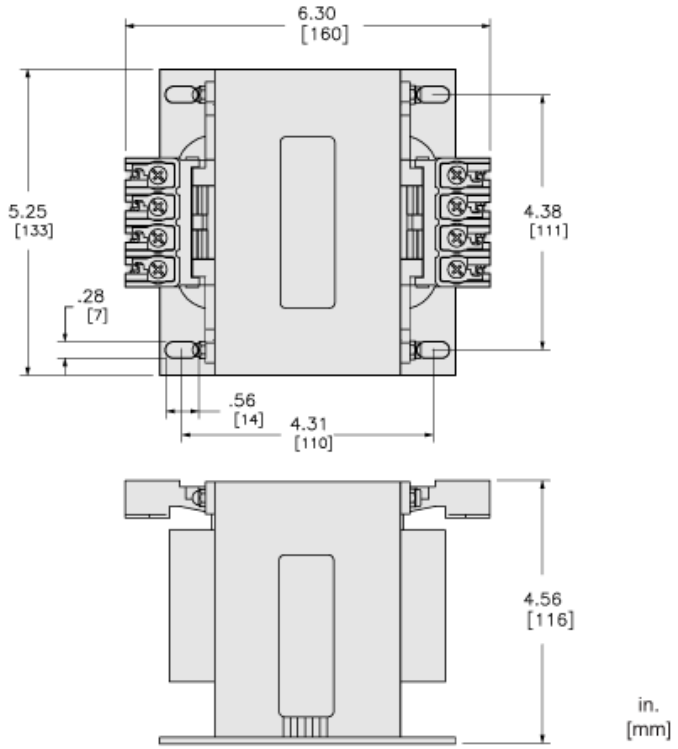

9070T1000D3

Connections and Wiring Diagrams

Voltage and Connection Options
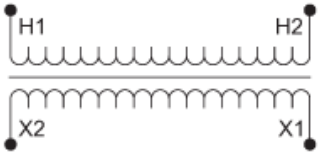
Voltage Code	Voltages		Connections	
	Primary	Secondary	Primary	Secondary
D3	208	120	Connect to H1 and H2	Connect to X1 and X2
D4	277	120		
D5	550 575 600	110 115 120		
D6	380	110		
D17	415	110		
D24	110 115 120	110 115 120		
D93	200	115		
D103	400	120