PIN #	COLOR
1	DRAIN
2	RED (V+)
3	BLACK (V-)
4	WHITE (CAN_H)
5	BLUE (CAN_L)

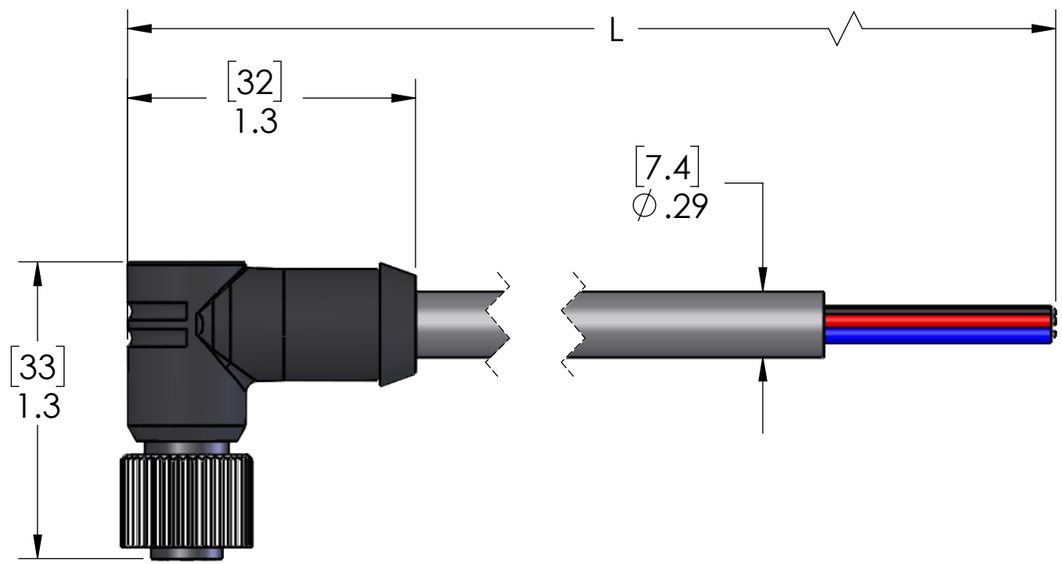

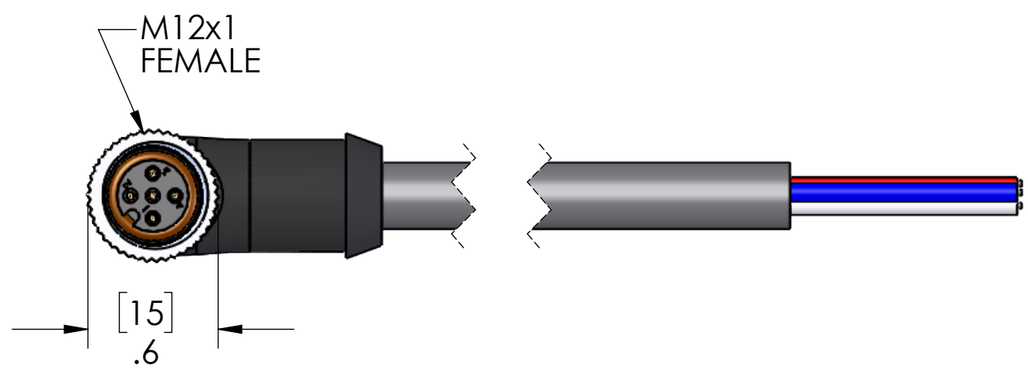

TABLE A		
P/N	L	STD?
MDCDD-5FP-1M-R	40" [1m]	YES
MDCDD-5FP-2M-R	79" [2m]	YES
MDCDD-5FP-3M-R	118" [3m]	NO
MDCDD-5FP-4M-R	157" [4m]	YES
MDCDD-5FP-5M-R	197" [5m]	YES
MDCDD-5FP-6M-R	236" [6m]	NO
MDCDD-5FP-8M-R	315" [8m]	NO
MDCDD-5FP-10M-R	393" [10m]	YES
MDCDD-5FP-15M-R	590" [15m]	YES
MDCDD-5FP-20M-R	786" [20m]	YES

MATERIALS:	
BODY:	BLACK PVC
INSERTS:	POLYAMIDE
CONTACTS:	GOLD PLATED COPPER ALLOY
COUPLINGS:	NICKEL PLATED BRASS
CABLE:	22/2, 24/2 DEVICENET DROP CABLE
APPROVALS:	
US:	UL LISTED
CANADA:	C-UL LISTED
RoHS:	YES
CE:	YES

PROPRIETARY AND CONFIDENTIAL

THE INFORMATION CONTAINED IN THIS DRAWING IS THE SOLE PROPERTY OF MENCOM CORPORATION. ANY REPRODUCTION IN PART OR AS A WHOLE WITHOUT THE WRITTEN PERMISSION OF MENCOM CORPORATION IS PROHIBITED.

VOLTS	300V
AMPS	4A
TEMP:	80°C

UNLESS OTHERWISE SPECIFIED:

DIMENSIONS ARE IN INCHES AND [MM]

MATERIAL

FINISH

DO NOT SCALE DRAWING

DRAWN BY	ADM
DRAWN DATE	09/22/2016
CHECKED BY	
CHECK DATE	

COMMENTS:

MENCOM CORPORATION

TITLE:

5 POL MDC FEM PLUG R/A

SIZE B | DWG. NO. MDCDD-5FP-ZZ-R | REV A

SCALE: 3:2 | WEIGHT: | SHEET 1 OF 1